Job Name _____ Contractor _____

Job Location _____ Approval _____

Engineer _____ Contractor's P.O. No. _____

Approval _____ Representative _____

**LEAD FREE***

# HydroGuard® XP Master Tempering Valves Supply Fixture

## Series LFMM430 Bottom Inlets/Side Outlet — Wall Mounted Cabinet

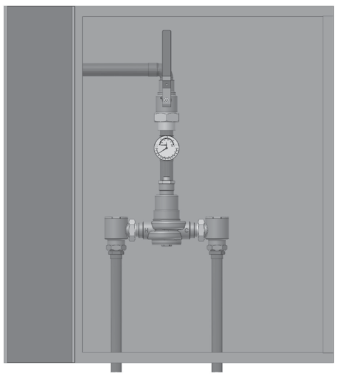

### Features

- Features Lead Free* construction to comply with Lead Free* installation requirements.
- Paraffin-based advanced thermal actuation technology to sense and adjust outlet temperature
- Dirt and lime resistant poppet and seat design
- Virtual shutoff if supply pressure fails
- Vandal-resistant locking mechanism to secure temperature setting
- Stainless steel or white painted cabinets
- Factory tested valve and piping
- Rotatable union triple-duty checkstops with filters, dial-thermometer, ball valve
- Rough bronze and chrome finishes

Advanced Thermal Activation

### Specifications

| | |
|---|---|
| Connections | See chart on reverse |
| Maximum Hot Water Supply Temperature | 200°F (93°C) |
| Minimum Hot Water Supply Temperature** | 5°F (3°C) above set point |
| Minimum Flow*** | 0.5 gpm (1.9 lpm) |
| Maximum Operating Pressure | 125 psi (861 kPa) |
| Temperature Adjustment Range**** | Standard 90 – 160°F (32 – 71°C)<br>Low 60 – 90°F (16 – 32°C) |
| Hot Water Inlet Temperature Range | 120 – 180°F (49 – 82°C) |
| Cold Water Inlet Temperature Range | 40 – 80°F (4 – 27°C) |
| Listing/Compliance–Valve Only | ASSE 1017, CSA B125 |

** The wetted surface of this product contacted by consumable water contains less than one quarter of one percent (0.25%) of lead by weight.*
*** With equal pressure*
**** Minimum flow when the valve is installed at or near hot water source w/ recirculated tempered water with a properly sized continuously operating recirculating pump*
***** Note: Low limit cannot be less than the cold water temperature. For best operation, hot water should be at least 5°F (3°C) above desired set point.*

### Capacity

| Flow Capacity at 50-50 Mixed Ratio | | | | | | | | |
|---|---|---|---|---|---|---|---|---|
| | | | Pressure Drop Across Valve | | | | | |
| Model | Min. Flow to ASSE 1017 | $C_V$ | 5 psi (34 kPa) | 10 psi (69 kPa) | 20 psi (138 kPa) | 30 psi (207 kPa) | 45 psi (310 kPa) | 60 psi (414 kPa) |
| LFMM431 | 3 gpm<br>11 lpm | 6.32 | 14 gpm<br>53 lpm | 20 gpm<br>76 lpm | 28 gpm<br>106 lpm | 35 gpm<br>132 lpm | 42 gpm<br>159 lpm | 49 gpm<br>185 lpm |
| LFMM432 | 4 gpm<br>15 lpm | 9.49 | 21 gpm<br>80 lpm | 30 gpm<br>114 lpm | 42 gpm<br>159 lpm | 52 gpm<br>197 lpm | 64 gpm<br>242 lpm | 74 gpm<br>280 lpm |
| LFMM433 | 5 gpm<br>19 lpm | 16.44 | 37 gpm<br>140 lpm | 52 gpm<br>197 lpm | 74 gpm<br>280 lpm | 90 gpm<br>341 lpm | 110 gpm<br>416 lpm | 127 gpm<br>481 lpm |
| LFMM434 | 7 gpm<br>26 lpm | 21.50 | 48 gpm<br>182 lpm | 68 gpm<br>257 lpm | 96 gpm<br>363 lpm | 118 gpm<br>447 lpm | 144 gpm<br>545 lpm | 167 gpm<br>632 lpm |
| LFMM435 | 10 gpm<br>38 lpm | 31.00 | 69 gpm<br>261 lpm | 98 gpm<br>371 lpm | 139 gpm<br>526 lpm | 170 gpm<br>644 lpm | 208 gpm<br>787 lpm | 240 gpm<br>908 lpm |

Powers product specifications in U.S. customary units and metric are approximate and are provided for reference only. For precise measurements, please contact Powers Technical Service. Powers reserves the right to change or modify product design, construction, specifications, or materials without prior notice and without incurring any obligation to make such changes and modifications on Powers products previously or subsequently sold.

POWERS™
A WATTS Brand

## Dimensions

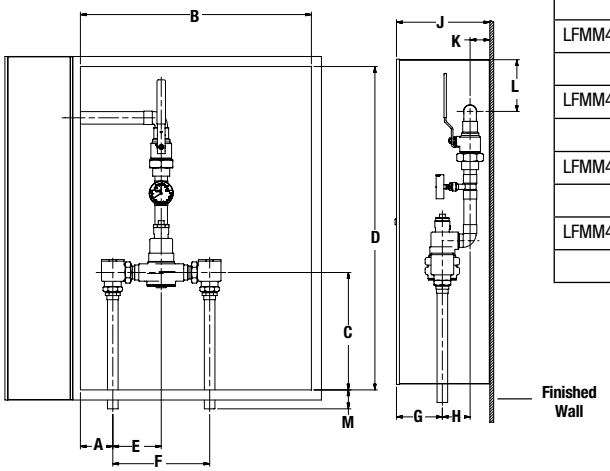


| Valve | A | B | C | D | E | F | G | H | J | K | L | M |
|---|---|---|---|---|---|---|---|---|---|---|---|---|
| LFMM431 | 4-3/8" | 22" | 14-3/4" | 33" | 4-5/8" | 9-1/4" | 4-5/8" | 2-5/8" | 9" | 1-7/8" | 2" | 2" |
| | (111) | (559) | (375) | (838) | (117) | (235) | (117) | (67) | (229) | (48) | (51) | (51) |
| LFMM432 | 4-3/8" | 22" | 14-3/4" | 33" | 4-5/8" | 9-1/4" | 4-5/8" | 2-3/4" | 9" | 1-3/4" | 1-5/8" | 2" |
| | (111) | (559) | (375) | (838) | (117) | (235) | (117) | (70) | (229) | (44) | (41) | (51) |
| LFMM433 | 3-5/8" | 29" | 15-1/8" | 42" | 6-1/4" | 12-1/2" | 5-7/8" | 3-3/8" | 12" | 2-3/4" | 6-7/8" | 2-1/2" |
| | (92) | (734) | (384) | (1067) | (159) | (318) | (149) | (86) | (305) | (70) | (175) | (64) |
| LFMM434 | 3-5/8" | 29" | 15-1/8" | 42" | 6-1/4" | 12-1/2" | 5-7/8" | 3-5/8" | 12" | 2-1/2" | 6-1/4" | 2-1/2" |
| | (92) | (734) | (384) | (1067) | (159) | (318) | (149) | (92) | (305) | (64) | (159) | (64) |
| LFMM435 | 4-3/4" | 38" | 20-1/8" | 52" | 7-7/8" | 15-3/4" | 6" | 4-1/4" | 13" | 2-3/4" | 6-1/4" | 2-1/2" |
| | (121) | (965) | (511) | (1321) | (200) | (400) | (152) | (108) | (330) | (70) | (159) | (64) |

| Valve | Inlets | Outlet |
|---|---|---|
| LFMM431 | 3/4" (20) | 3/4" (20) |
| LFMM432 | 3/4" (20) | 1" (25) |
| LFMM433 | 1-1/4" (32) | 1-1/4" (32) |
| LFMM434 | 1-1/4" (32) | 1-1/2" (40) |
| LFMM435 | 2" (50) | 2" (50) |

*Note:*
*Dimensions are shown ±1/2"*
*Dimensions in parentheses are in mm*

## Ordering Information

□□□□□□□ □G□□□□□

| Valve | Order Code |
|---|---|
| 42 gpm (159 lpm) | LFMM431 |
| 64 gpm (242 lpm) | LFMM432 |
| 110 gpm (416 lpm) | LFMM433 |
| 144 gpm (545 lpm) | LFMM434 |
| 208 gpm (787 lpm) | LFMM435 |

| Finish | |
|---|---|
| Rough Bronze | A |
| Chrome Plated | C |

| Piping Inlets/Outlet | |
|---|---|
| Bottom/Side | G |

| Cabinet Style | |
|---|---|
| Stainless Steel, Wall Mount | Q |
| Painted, Wall Mount | U |

| View Port | Order Code |
|---|---|
| None | 0 |
| Window | W |

| Alarm System | Order Code |
|---|---|
| None | 0 |
| Aqua Sentry® 2 Alarm | 4 |

| Option | |
|---|---|
| None | 0 |
| Cold Water Bypass | 2 |
| T/P Gauge on Inlets | 4 |
| C/W Bypass & T/P Gauge on Inlets | 6 |

| Temperature Range | |
|---|---|
| 90°F – 160°F (32°C – 71°C) | S |
| 60°F – 90°F (16°C – 32°C) | W |

## Recirculation Piping Diagram

Please see Piping Diagram Section of this catalog.

## Typical Specification — Supply Fixtures

Cabinet Supply Fixture (CSF) shall be factory assembled and tested and include a stainless steel or painted steel cabinet. CSF shall feature a HydroGuard® XP LFMM430 series master-tempering valve with advanced paraffin-based actuation technology. The valves shall be constructed using Lead Free* brass. Lead Free* brass valves shall comply with state codes and standards, where applicable, requiring reduced lead content. CSF shall also include copper piping, ball valve(s) and temperature/pressure gauge for diagnostics. The tempering valve shall have union checkstops, an outlet temperature range of 90 – 160°F (32 – 71°C) (with lockable means), a single seat design for positive shutoff and an approach temperature of 5°F (3°C). Valve shall be ASSE 1017 listed and CSA certified. Minimum flows to ASSE 1017 shall be LFMM431 (3.0 gpm, 11 lpm), LFMM432 (4.0 gpm, 15 lpm), LFMM433 (5.0 gpm, 19 lpm), LFMM434 (7.0 gpm, 26 lpm), LFMM435 (10.0 gpm, 38 lpm).
Valve shall be a Powers Model _____. All alternatives must have written approval prior to bidding.

POWERS™

*A* **WATTS** *Brand*

**USA:** Tel: (800) 669-5430 • Fax: (847) 229-0526 • PowersControls.com
**Canada:** Tel: (905) 332-4090 • Fax: (905) 332-7068 • PowersControls.ca
**Latin America:** Tel: (52) 81-1001-8600 • PowersControls.com



© 2017 Powers