Job Name _____ Contractor _____

Job Location _____ Approval _____

Engineer _____ Contractor's P.O. No. _____

Approval _____ Representative _____

LEAD FREE*

HydroGuard® XP Master Tempering Valves Supply Fixture

Series LFMM430 Bottom Inlets/Bottom Outlet — Semi-Recessed Cabinet

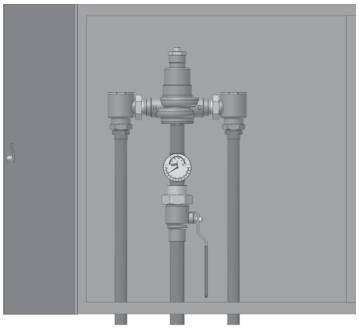

Advanced Thermal Activation

Features

- Features Lead Free* construction to comply with Lead Free* installation requirements.
- Paraffin-based advanced thermal actuation technology to sense and adjust outlet temperature
- Dirt and lime resistant poppet and seat design
- Virtual shutoff if supply pressure fails
- Vandal-resistant locking mechanism to secure temperature setting
- Stainless steel or white painted cabinets
- Factory tested valve and piping
- Rotatable union triple-duty checkstops with filters, dial-thermometer, ball valve
- Rough bronze and chrome finishes

Specifications

Connections	See chart on reverse
Maximum Hot Water Supply Temperature	200°F (93°C)
Minimum Hot Water Supply Temperature**	5°F (3°C) Above Set Point
Minimum Flow***	0.5 gpm (1.9 lpm)
Maximum Operating Pressure	125 psi (861 kPa)
Temperature Adjustment Range****	Standard 90 – 160°F (32 – 71°C) Low 60 – 90°F (16 – 32°C)
Hot Water Inlet Temperature Range	120 – 180°F (49 – 82°C)
Cold Water Inlet Temperature Range	40 – 80°F (4 – 27°C)
Listing/Compliance–Valve Only	ASSE 1017, CSA B125

** The wetted surface of this product contacted by consumable water contains less than one quarter of one percent (0.25%) of lead by weight.*
*** With equal pressure*
**** Minimum flow when the valve is installed at or near hot water source w/ recirculated tempered water with a properly sized continuously operating recirculating pump*
***** Note: Low limit cannot be less than the cold water temperature. For best operation, hot water should be at least 5°F (3°C) above desired set point.*

Capacity

Flow Capacity at 50-50 Mixed Ratio								
		Pressure Drop Across Valve						
Model	Min. Flow to ASSE 1017	C_V	5 psi (34 kPa)	10 psi (69 kPa)	20 psi (69 kPa)	30 psi (207 kPa)	45 psi (310 kPa)	60 psi (414 kPa)
LFMM431	3 gpm 11 lpm	6.32	14 gpm 53 lpm	20 gpm 76 lpm	28 gpm 106 lpm	35 gpm 132 lpm	42 gpm 159 lpm	49 gpm 185 lpm
LFMM432	4 gpm 15 lpm	9.49	21 gpm 80 lpm	30 gpm 114 lpm	42 gpm 159 lpm	52 gpm 197 lpm	64 gpm 242 lpm	74 gpm 280 lpm
LFMM433	5 gpm 19 lpm	16.44	37 gpm 140 lpm	52 gpm 197 lpm	74 gpm 280 lpm	90 gpm 341 lpm	110 gpm 416 lpm	127 gpm 481 lpm
LFMM434	7 gpm 26 lpm	21.50	48 gpm 182 lpm	68 gpm 257 lpm	96 gpm 363 lpm	118 gpm 447 lpm	144 gpm 545 lpm	167 gpm 632 lpm
LFMM435	10 gpm 38 lpm	31.00	69 gpm 261 lpm	98 gpm 371 lpm	139 gpm 526 lpm	170 gpm 644 lpm	208 gpm 787 lpm	240 gpm 908 lpm

Powers product specifications in U.S. customary units and metric are approximate and are provided for reference only. For precise measurements, please contact Powers Technical Service. Powers reserves the right to change or modify product design, construction, specifications, or materials without prior notice and without incurring any obligation to make such changes and modifications on Powers products previously or subsequently sold.

POWERS™
A WATTS Brand

Dimensions

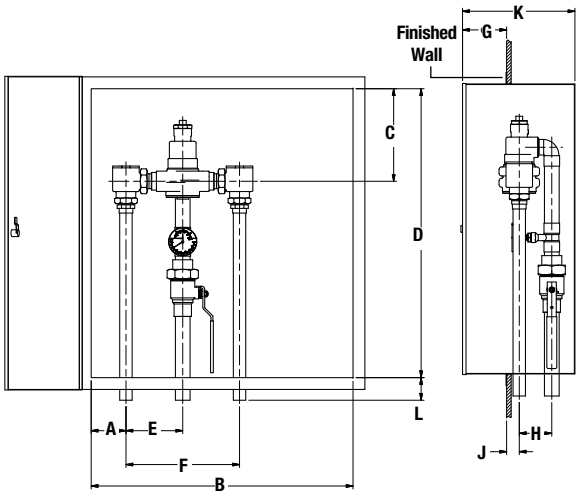

Valve	A	B	C	D	E	F	G	H	J	K	L
LFMM431	3-½"	20"	9-¼"	24"	4-⅝"	9-¼"	3-½"	2-⅝"	1-⅛"	9"	2"
	(89)	(508)	(235)	(610)	(117)	(235)	(89)	(67)	(29)	(229)	(50)
LFMM432	3-½"	20"	9-¼"	24"	4-⅝"	9-¼"	3-½"	2-¾"	1-⅛"	9"	2"
	(89)	(508)	(235)	(610)	(117)	(235)	(89)	(70)	(29)	(229)	(50)
LFMM433	3-⅞"	29"	10-¼"	32"	6-¼"	12-½"	4-½"	3-⅜"	1-⅜"	12"	2-½"
	(98)	(737)	(260)	(813)	(159)	(318)	(114)	(86)	(35)	(305)	(64)
LFMM434	3-⅞"	29"	10-¼"	32"	6-¼"	12-½"	4-½"	3-⅝"	1-⅜"	12"	2-½"
	(98)	(737)	(260)	(813)	(159)	(318)	(114)	(92)	(35)	(305)	(64)
LFMM435	4-⅛"	38"	13-⅝"	38"	7-⅞"	15-¾"	4"	4-¼"	2"	13"	2-½"
	(105)	(965)	(346)	(965)	(200)	(400)	(102)	(108)	(50)	(330)	(64)

Valve	Inlets	Outlet
LFMM431	¾" (20)	¾" (20)
LFMM432	¾" (20)	1" (25)
LFMM433	1-¼" (32)	1-¼" (32)
LFMM434	1-¼" (32)	1-½" (40)
LFMM435	2" (50)	2" (50)

Note:
Dimensions are shown ±½"
Dimensions in parentheses are in mm

Ordering Information

☐☐☐☐☐☐☐–☐ F ☐☐☐☐☐

Valve — **Order Code**

42 gpm (159 lpm)	LFMM431
64 gpm (242 lpm)	LFMM432
110 gpm (416 lpm)	LFMM433
144 gpm (545 lpm)	LFMM434
208 gpm (787 lpm)	LFMM435

Finish

Rough Bronze	A
Chrome Plated	C

Piping Inlets/Outlet

Bottom/Bottom	F

Cabinet Style

Stainless Steel, Semi-Recessed	P
Painted, Semi-Recessed	T

View Port — **Order Code**

None	0
Window	W

Alarm System — **Order Code**

None	0
Aqua Sentry® 2 Alarm	4

Option

None	0
Cold Water Bypass	2
T/P Gauge on Inlets	4
C/W Bypass & T/P Gauge on Inlets	6

Motor Range

90°F – 160°F (32°C – 71°C)	S
60°F – 90°F (16°C – 32°C)	W

Recirculation Piping Diagram

Please see Piping Diagram Section of this catalog.

Typical Specification — Supply Fixtures

Cabinet Supply Fixture (CSF) shall be factory assembled and tested and include a stainless steel or painted steel cabinet. CSF shall feature a HydroGuard® XP LFMM430 series master-tempering valve with advanced paraffin-based actuation technology. The valves shall be constructed using Lead Free* brass. Lead Free* brass valves shall comply with state codes and standards, where applicable, requiring reduced lead content. CSF shall also include copper piping, ball valve(s) and temperature/pressure gauge for diagnostics. The tempering valve shall have union checkstops, an outlet temperature range of 90 – 160°F (32 – 71°C) (with lockable means), a single seat design for positive shutoff and an approach temperature of 5°F (3°C). Valve shall be ASSE 1017 listed and CSA certified. Minimum flows to ASSE 1017 shall be LFMM431 (3.0 gpm, 11 lpm), LFMM432 (4.0 gpm, 15 lpm), LFMM433 (5.0 gpm, 19 lpm), LFMM434 (7.0 gpm, 26 lpm), LFMM435 (10.0 gpm, 38 lpm).
Valve shall be a Powers model _____. All alternatives must have written approval prior to bidding.

POWERS™

A **WATTS** *Brand*

USA: Tel: (800) 669-5430 • Fax: (847) 229-0526 • PowersControls.com
Canada: Tel: (905) 332-4090 • Fax: (905) 332-7068 • PowersControls.ca
Latin America: Tel: (52) 81-1001-8600 • PowersControls.com

© 2017 Powers