Price List

Leader in Water Tempering Technology Since 1891

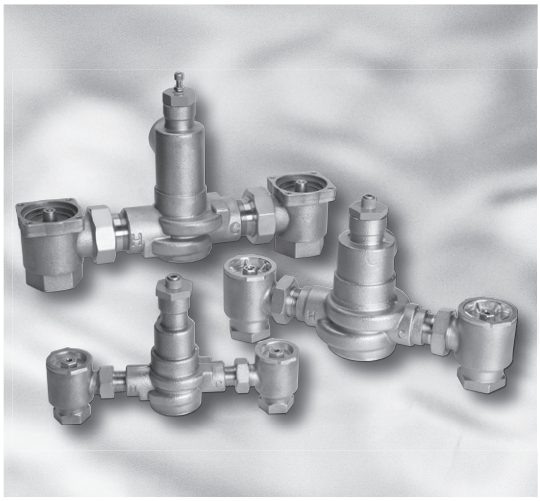

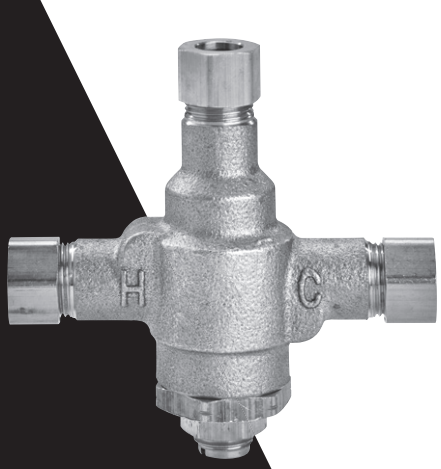

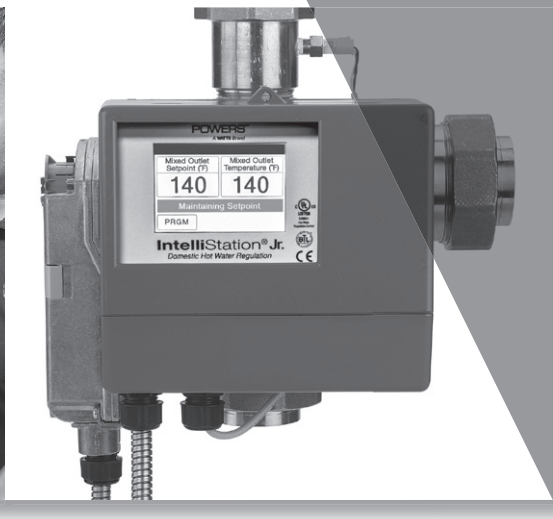

Effective January 8, 2024

All prices supersede previous issues, are temporary and subject to change without notice.

PowersControls.com

POWERS™
A WATTS Brand

Electronic is Green!

For the latest Powers pricing information in electronic format, visit our Data Exchange at:

www.wattswater.com/dataexchange

- Download product and list price data in .pdf
- Easy access to list price data for business systems
- Sign up for e-mail alerts when data is updated
- Access other Watts Water Technologies brands pricing data

Table of Contents

Standard Terms and Conditions of Sale 2-3

Pressure Balancing Valves
- Series 900 Biltmore® 4
- Series PB410 HydroGuard® 6-7

Combination T/P Bath, Shower and Lavatory Valves
- HydroGuard® T/P Series e700 5
- HydroGuard® T/P Series e423 Valves 9
- HydroGuard® T/P Series e420 8-9
- HydroGuard® T/P Series e427/e428 10

Thermostatic Lavatory Valves
- HydroGuard® Series LFG480/LFE480 11
- HydroGuard® Series LFLM490/LFLM490-10 11
- HydroGuard® Series LFLM495 12

Thermostatic Master Mixing Valves
- HydroGuard® XP Series LFMM430 & Supply Fixtures 13-14
- HydroGuard® XP Series LFSH1430 & Supply Fixtures 15
- The Lead Free Tempering Re-circulation Loop 16
- HydroGuard® XP Series LFMM430 & LFSH1430 HiLo Supply Fixtures . 17
- HydroGuard® XP High Capacity Systems Series LFSH1430 18

IntelliStation®
- Single & Multi-Valve Lead Free 19

IntelliStation® Jr.
- Single & Multi-Valve Lead Free 20

POWERSTATION™
- Single-Valve Lead Free 21
- Multi-Valve Lead Free 22

Emergency Tempering Valves, HydroGuard® ES/ETV Series 23-24

Hydropanel II Modular Systems
- With e700 Valves 25
- With 900, PB410 and e420 Valves 26-27

HydroGuard® ESP™
- Showers 28
- Shower Systems (Hydropanel II ESP) 29

Alarm Systems
- Lead Free Aqua Sentry® 2 Series LF460 30

Thermostatic Specialty Valves
- Fotoguard 31
- Fotopanel 31

Accessories
- High Temperature Shutoff Device 32
- Checkstops 32
- Showerheads 32
- Institutional Showerheads 32
- Arm/Flange Kits 33
- Hand Showers 33
- Tub Spouts 34
- Diverters 34
- Vacuum Breakers 34
- Volume Control Valves 34
- Dial Thermometers 34
- Metering Valve Shower 34

Self Operating Regulators
- #11 Complete Regulators 35
- #11 Lower Housing Assemblies 35
- #11 Thermal Systems and Accessories 36

Flowrite® Valves and Accessories
- Heavy Duty Bronze Series Flowrite® Valves and Accessories 37-38
- Heavy Duty Iron Series Flowrite® Valves and Accessories 39-40
- Flowrite II Unmounted Valve Accessories 41

Accritem® Controllers and Accessories 42

Parts 43-62

Freight Terms: All prices are FOB factory. Full freight is allowed on shipments of $2,500 or more within the continental U.S.A. Such allowance is based on the lowest motor carrier transportation rate.
Terms for export shipment will be provided on request.

Terms of Sale: All sales are F.O.B. shipping point.

Payment Terms: Invoices are due and payable 30 days from the date of invoice.

Purchase Order Forms: Orders submitted on the Purchaser's own purchase order forms will be accepted only with the express understanding that no statements, clauses or conditions contained in said order form will be binding on the Seller if they in any way modify the Seller's own terms and conditions of sales.

Minimum Order Requirements: Minimum order requirements are $200 net.

Special Products: Orders for special or modified products are non-cancelable. In the event that the customer cancels an order for such products, Watts shall charge the customer an amount equal to Watts' costs and expenses incurred in performing the purchase order prior to receipt of notice of cancellation.

Partial Shipment: The Seller reserves the right to make partial shipments from time to time and render invoices therefor which shall be due and payable in accordance with stated payment terms.

Delays: The Seller shall not be liable for any loss, damage, or delay occasioned by any causes beyond the Seller's control, including, but not limited to governmental actions or orders, embargoes, strikes, differences with workmen, fires, floods, accidents, or transportation delays.

Rejection of Shipments: If the Purchaser is unable or unwilling to accept any shipment, the Purchaser shall be liable to the Seller, in addition to any other rights to which the Seller may be entitled, for freight, express, storage, extra cost of handling, and other expenses incurred thereby.

Taxes: The amount of any present or future sales, use, occupancy, excise, or other tax, federal, state or local, which the Seller now, or hereafter shall be legally obligated to pay, either on its own behalf or on behalf of the Purchaser or otherwise, with respect to the material covered by this order or contract, shall (unless the prices contained herein are stated expressly to include such tax) be added to such prices and paid by the Purchaser. Purchaser agrees to report and pay any tax direct on non-exempt transaction, in case Seller's invoices do not indicate a charge therefor.

Limited Warranty: The Seller warrants each HydroGuard T/P e700 series valve to be free from defects in material and workmanship under normal usage for a period of one year from the date of original shipment. The Seller further warrants the internal tempering mechanism to be free from defects in material and workmanship under normal usage for a period of five years from the date of original shipment. The Seller warrants all other equipment manufactured by it to be free from defects in material and workmanship under normal usage for a period of one year from the date of original shipment. In the event of such defects within the applicable warranty period, the Seller will, at its option, repair or replace the product without charge.

The remedy described in the paragraph above shall constitute the sole and exclusive remedy for breach of warranty, and the Seller shall not be responsible for any incidental, special or consequential damages, including without limitation, lost profits or the cost of repairing or replacing other property which is damaged if the product does not work properly, damages or other costs resulting from labor charges, delays, vandalism, negligence, fouling caused by foreign material, damage from adverse water conditions, chemicals, decomposition by galvanic action, or any other circumstances over which the Seller has no control. This warranty shall be invalidated by any abuse, misuse, misapplication or improper installation of this product.

THE WARRANTY SET FORTH HEREIN IS GIVEN EXPRESSLY AND IS THE ONLY WARRANTY GIVEN BY THE SELLER WITH RESPECT TO THE PRODUCTS. THE SELLER MAKES NO OTHER WARRANTIES, EXPRESS OR IMPLIED. THE SELLER SPECIFICALLY DISCLAIMS ALL OTHER WARRANTIES, EXPRESS OR IMPLIED, INCLUDING BUT NOT LIMITED TO THE IMPLIED WARRANTIES OF MERCHANTABILITY AND FITNESS FOR A PARTICULAR PURPOSE.

Some states do not allow limitations on how long an implied warranty lasts, and some states do not allow the exclusion or limitation of incidental or consequential damages. Therefore the above limitations may not apply to you. This Limited Warranty gives you specific legal rights, and you may have other rights that vary from state to state. You should consult applicable laws to determine your rights. **SO FAR AS IS CONSISTENT WITH APPLICABLE STATE LAW, ANY IMPLIED WARRANTIES THAT MAY NOT BE DISCLAIMED, INCLUDING THE IMPLIED WARRANTIES OF MERCHANTABILITY AND FITNESS FOR A PARTICULAR PURPOSE, ARE LIMITED IN DURATION TO ONE YEAR FROM THE DATE OF ORIGINAL SHIPMENT.**

Purchaser's Remedies: IN NO EVENT SHALL THE SELLER BE LIABLE, IN CONTRACT, TORT, STRICT LIABILITY, OR UNDER ANY OTHER LEGAL THEORY, FOR INCIDENTAL, INDIRECT, SPECIAL OR CONSEQUENTIAL DAMAGES, REGARDLESS OF WHETHER IT WAS INFORMED OF THE POSSIBILITY OF SUCH DAMAGES, AND IN NO EVENT SHALL THE SELLER'S LIABILITY EXCEED AN AMOUNT EQUAL TO THE SALES PRICE OF THE PRODUCTS. THE FOREGOING LIMITATIONS SHALL APPLY TO THE FULLEST EXTENT PERMITTED BY LAW.

Shortage Claims: Claims for shortage or incorrect filling of orders must be made within 15 days from the date of delivery.

Return Goods Policy: No material shall be returned without authorization. When credit is issued it will be at the price charged, or prevailing price if lower, less handling charges based on costs of reconditioning, boxing, etc. However, a minimum 25% handling charge will apply. A minimum handling charge of $20.00 is applied whenever the 25% handling deduction does not total $20.00. Products which are obsolete or made to special order are not returnable.

Returned Material Procedure: Customer Service will provide a Return Material Authorization (RMA) number, which must be written on all shipping label(s) of the returned material. Material received without an RMA number may be refused and returned to the sender at the sender's expense. When calling or faxing to request an RMA number, the following information will be necessary:

- Seller invoice number and/or sales order number
- Seller part number
- Seller product description
- Quantity of material to be returned
- Reason for return—be specific
- All returns must be shipped freight prepaid

All returned material is subject to inspection by the Seller and should be returned in original unopened shipping cartons or suitably packed to prevent damage in transit.

Special order and non-standard material is non-cancelable and not returnable.

ALL MTO PRODUCTS ARE NON-RETURNABLE

Customer Support:

For Customer Service: (888) 432-8932; Monday through Friday, 8:00 AM to 5:00 PM EST.

For Technical Support: (888) 432-8932; Monday through Friday, 8:00 AM to 5:00 PM CST.

Note: Prices and terms are subject to change without notice and supersede all previous quotations. The Seller reserves the right to change or modify product design or construction without prior notice and without incurring any obligation to make such changes and modifications on products previously or subsequently sold. Weights are not guaranteed but are shown only for the Purchaser's reference.

Governing Law: These terms and conditions shall be governed by, construed, and enforced in accordance with the laws of the Commonwealth of Massachusetts, without giving effect to its choice of law rules. All disputes under these terms and conditions shall be resolved exclusively by courts located in the Commonwealth of Massachusetts.

POWERS™ Biltmore Series 900 Pressure Balancing Valves

A **WATTS** *Brand*

All Series 900 Pressure Balancing Mixing Valves include integral check/service stops, adjustable handle rotation limit stop, reversible inlets for back-to-back installation, four-port connections, and reliable poppet/diaphragm cartridge construction.

	Description	Order Code	Weight	List Price
P902	SS faceplate, metal lever handle. CP finish.			
	1/2" copper sweat connections	**P902H**	3.2	$535.80
	1/2" IPS connections	**P902G**	3.2	$546.30
P905	ABS faceplate with color-coded graphics, lever handle. CP finish.			
	1/2" copper sweat connections	**P905H**	3.0	$395.10
	1/2" IPS connections	**P905G**	3.0	$402.10
P909	ABS faceplate with color-coded graphics, acrylic handle. CP finish.			
	1/2" copper sweat connections	**P909H**	3.0	$490.60
	1/2" IPS connections	**P909G**	3.0	$502.90
P910	ABS faceplate with color-coded graphics, metal lever handle. CP finish.			
	1/2" copper sweat connections	**P910H**	3.0	$507.90
	1/2" IPS connections	**P910G**	3.0	$523.70

To order complete Series 900 systems:

P ☐ ☐ ☐ ☐ ☐ ☐ ☐ ☐ ☐ ☐

Valves

See above for selection of valve order code

	List Price	Weight (lbs)	Order Code
Showerheads, Arm and flange			
Economizer, Chrome-Plated ABS, Arm & Flange	$86.80	0.8	**J1**
Standard Chrome-Plated Brass, Arm & Flange	$124.10	1.2	**K1**
Deluxe, Chrome Plated Brass, Arm and Flange	$168.00	1.6	**M1**
Low Flow Shower (1.5gpm), Arm & Flange	$232.30	2.8	**G1**
Low Flow Shower (1.5gpm), Arm & Flange	$195.10	0.53	**H1**
Arm & Flange Only (no showerhead)	$53.00	0.3	**O1**
Economizer, Arm & Flange & Hi-Temp Shut-Off	$203.40	1.1	**J4**
Standard Arm & Flange & Hi-Temp Shut-Off	$240.70	1.5	**K4**
Deluxe Arm & Flange & Hi-Temp Shut-Off	$284.80	1.9	**M4**
Low Flow Shower (1.6 gpm), Arm & Flange & Hi-Temp Shut-Off	$349.20	3.1	**G4**
Low Flow Shower (1.5 gpm), Arm & Flange & Hi-Temp Shut-Off	$311.90	1.1	**H4**
Tub Spouts			
Non-Diverter, Chrome Plated 1/2" IPS	$76.50	0.4	**R**
Diverter, Chrome Plated 1/2" IPS	$91.70	0.7	**S**
Diverter, Chrome Plated 1/2" Slip-Fit	$100.20	1.0	**U**
Hand Shower Systems			
24" Chrome ADA Wall Grab Bar System	$748.70	4.7	**1**
36" Chrome ADA Wall Grab Bar System	$770.70	5.5	**2**
Standard, Hand Spray Push Button, CP Plastic, 2.50 gpm, Wall Mount, 3-Position, 2/Kit	$347.60	2.0	**5**
Standard, Hand Spray Push Button, CP Plastic, 2.50 gpm, Metal Hose, 24" Glide Rail	$454.00	2.6	**8**
Standard, Hand Spray Push Button, CP Plastic, 1.80 gpm WaterSense®, Metal Hose, 24" Glide Rail	$454.00	2.6	**8WS**
Standard, Hand Spray Push Button, CP Plastic, 2.50 gpm, Metal Hose, 30" Glide Rail	$611.60	3.1	**N**
Standard, Hand Spray Push Button, CP Plastic, 1.80 gpm WaterSense®, Metal Hose, 30" Glide Rail	$611.60	3.1	**NWS**
Professional, Hand Spray Push Button, White Plastic, 2.50 gpm, Metal Hose, 18" Glide Rail	$467.50	2.5	**P**
Professional, Hand Spray Push Button, White Plastic, 2.50 gpm, Metal Hose, 24" Glide Rail	$467.50	2.5	**7**
Professional, Hand Spray Push Button, White Plastic, 1.80 gpm WaterSense®, Metal Hose, 24" Glide Rail	$731.80	2.5	**7WS**
Deluxe, Hand Spray 5 Setting, CP Plastic, 2.50 gpm, Metal Hose, 24" Glide Rail	$731.80	3.2	**6**
Deluxe, Hand Spray 5 Setting, CP Plastic, 1.80 gpm WaterSense®, Metal Hose, 24" Glide Rail	$875.90	3.2	**6WS**
Deluxe, Hand Spray 5 Setting, CP Plastic, 2.50 gpm, Metal Hose, 30" Glide Rail	$875.90	3.3	**3**
Deluxe, Hand Spray 5 Setting, CP Plastic, 1.80 gpm WaterSense®, Metal Hose, 30" Glide Rail	$710.40	3.3	**3WS**
Low Flow (1.5 gpm), Hand Spray Pause, 4 Setting, CP Plastic, Metal Hose, 24" Glide Rail, WaterSense®	$804.70	3.2	**M**
Low Flow (1.5 gpm), Hand Spray Pause, 4 Setting, CP Plastic, Metal Hose, 30" Glide Rail, WaterSense®	$766.30	3.3	**L**
Diverters			
Concealed Diverting Valve, 1/2" IPS, Metal Handle	$376.20	3.0	**Y**
Diverter, Concealed, Deluxe ABS Handle	$401.60	3.0	**A**
Diverter, Concealed, Deluxe Metal Handle	$413.40	3.0	**B**
Exposed Diverter, Shower Arm-Type, Chrome-Plated	$120.60	0.5	**Z**
Vacuum Breakers			
Vacuum Breaker, Elevated, Chrome-Plated	$528.50	2.0	**V**
Vacuum Breaker, In-Line	$81.60	1.0	**W**

ADA compliant

(Prices Effective 01/08/24)

All e700 Series valves feature advanced thermal actuators, adjustable handle rotation limit stop, integral checkstops, metal or ABS trim and 1/2" sweat connections. The e700 Series meets American with Disabilities Act (ADA) requirements.

5-year Limited Warranty.

e705 e707 e710

	List Price	Weight (lbs)	Order Code
Valves			
ABS Trim	$629.70	3.5	**e705**
Metal Trim	$673.20	3.5	**e710**
Euro Trim	$728.70	3.5	**e707**
Showerheads			
Economizer, Chrome-Plated ABS, Adjustable	$34.20	0.5	**J**
Standard, Chrome-Plated Brass	$71.40	0.9	**K**
Deluxe, Chrome-Plated Brass	$115.20	1.3	**M**
Low Flow (1.5 gpm), Chrome-Plated	$179.70	2.5	**G**
Low Flow (1.5 gpm), Chrome-Plated	$142.60	0.5	**H**
Arm and Flange Kits			
Standard Arm and Flange	$53.00	0.3	**1**
Deluxe Arm and Flange	$81.60	0.4	**2**
Standard Arm/Flange & Hi-Temp. Shut-Off	$169.60	0.6	**4**
Deluxe Arm/Flange & Hi-Temp. Shut-Off	$200.10	0.7	**5**
Tub Spouts			
Diverter, Chrome-Plated Brass, 3/4" IPS	$171.40	1.2	**Q**
Non-Diverter, Chrome-Plated, 1/2" IPS	$76.50	0.4	**R**
Diverter, Chrome-Plated, 1/2" IPS	$91.70	0.7	**S**
Diverter, Chrome-Plated Brass, 1/2" IPS	$157.80	1.3	**T**
Diverter, Chrome-Plated, 1/2" Slip-fit	$100.20	1.0	**U**
Hand Shower Systems			
24" Chrome ADA Wall Grab Bar System	$748.70	4.7	**1**
36" Chrome ADA Wall Grab Bar System	$770.70	5.5	**2**
Standard, Hand Spray Push Button, CP Plastic, 2.50 gpm, Wall Mount, 3-Position, 2/Kit	$347.60	2.0	**5**
Standard, Hand Spray Push Button, CP Plastic, 2.50 gpm, Metal Hose, 24" Glide Rail	$454.00	2.6	**8**
Standard, Hand Spray Push Button, CP Plastic, 1.80 gpm WaterSense®, Metal Hose, 24" Glide Rail	$454.00	2.6	**8WS**
Standard, Hand Spray Push Button, CP Plastic, 2.50 gpm, Metal Hose, 30" Glide Rail	$611.60	3.1	**N**
Standard, Hand Spray Push Button, CP Plastic, 1.80 gpm WaterSense®, Metal Hose, 30" Glide Rail	$611.60	3.1	**NWS**
Professional, Hand Spray Push Button, White Plastic, 2.50 gpm, Metal Hose, 18" Glide Rail	$467.50	2.5	**P**
Professional, Hand Spray Push Button, White Plastic, 2.50 gpm, Metal Hose, 24" Glide Rail	$445.20	2.5	**7**
Professional, Hand Spray Push Button, White Plastic, 1.80 gpm WaterSense®, Metal Hose, 24" Glide Rail	$467.50	2.5	**7WS**
Deluxe, Hand Spray 5 Setting, CP Plastic, 2.50 gpm, Metal Hose, 24" Glide Rail	$731.80	3.2	**6**
Deluxe, Hand Spray 5 Setting, CP Plastic, 1.80 gpm WaterSense®, Metal Hose, 24" Glide Rail	$731.80	3.2	**6WS**
Deluxe, Hand Spray 5 Setting, CP Plastic, 2.50 gpm, Metal Hose, 30" Glide Rail	$875.90	3.3	**3**
Deluxe, Hand Spray 5 Setting, CP Plastic, 1.80 gpm WaterSense®, Metal Hose, 30" Glide Rail	$875.90	3.3	**3WS**
Low Flow (1.5 gpm), Hand Spray Pause, 4 Setting, CP Plastic, Metal Hose, 24" Glide Rail, WaterSense®	$710.40	3.2	**M**
Low Flow (1.5 gpm), Hand Spray Pause, 4 Setting, CP Plastic, Metal Hose, 30" Glide Rail, WaterSense®	$804.70	3.3	**L**
Diverters			
Concealed Diverting Valve, 1/2" IPS, Metal Handle	$376.20	3.0	**Y**
Diverter, Concealed, Deluxe ABS Handle	$401.60	3.0	**A**
Diverter, Concealed, Deluxe Metal Handle	$413.40	3.0	**B**
Exposed Diverter, Shower Arm-Type, Chrome-Plated	$120.60	0.5	**Z**
Vacuum Breakers			
Vacuum Breaker, Elevated, Chrome-Plated	$528.50	2.0	**V**
Vacuum Breaker, In-Line	$81.60	1.0	**W**

Biltmore™ Series 900 Accessories/Parts

	Order Code	Weight	List Price
Thin Wall Installation	**900 119**	0.3	$51.10
Remodeling Plate, Stainless Steel, Polished Chrome	**900121D**	1.0	$100.50
Vandal-Resistant Screw Kit*	**900 034**	0.11	$47.20

**Parts discount applies*

(Prices Effective 01/08/24)

ADA compliant

Series PB410 HydroGuard® Pressure Balancing Valves

The series PB410 HydroGuard® features heavy, cast brass construction, a poppet type equalizing valve which offers a distinct advantage: it will not stick because of lime build-up or foreign particles in the supplies. The adjustable metal-to-metal temperature limit stop prevents accidental scalding caused by our adjustment of the handle. It also features integral checkstops, back to back and shallow installation. PB410 series is listed to ASSE 1016-P and certified to CSA B125 standard.

Model PB413000000

	Order Code	Weight	List Price
3 Port	**PB413**	4.0	$1,020.00
4 Port	**PB417**	4.6	$1,020.00

	Order Code	Weight	List Price

Series PB410 Accessories/Parts

Thin Wall Installation Accessory	**800 100**	0.3	$51.10
Stem Extension Accessory*	**410 233**	0.3	$50.40
Vandal-Resistant Screw Kit*	**420 267**	0.3	$17.70
Remodeling Plate, Stainless Steel. Polished Chrome.	**900121D**	1.0	$94.30

**Parts discount applies*

To order complete Series PB410 systems…

	List Price	Weight (lbs)	Order Code
Port			
3 Port	$1,020.00	4.0	**PB413**
4 Port	$1,020.00	4.6	**PB417**
Showerheads			
Economizer, Chrome-Plated ABS, Adjustable	$34.20	0.5	**J**
Standard, Chrome-Plated Brass	$71.40	0.9	**K**
Deluxe, Chrome-Plated Brass	$115.20	1.3	**M**
Low Flow (1.5 gpm) (Chrome-Plated)	$179.70	2.5	**G**
Low Flow (1.5 gpm) (Chrome-Plated)	$142.60	0.5	**H**
Arm and Flange Kits			
Standard Arm and Flange	$53.00	0.3	**1**
Deluxe Arm and Flange	$81.60	0.4	**2**
Standard Arm/Flange & High Temp. Shut-Off	$169.60	0.6	**4**
Deluxe Arm/Flange & High Temp. Shut-Off	$200.10	0.7	**5**
Tub Spouts			
Diverter, Chrome-Plated Brass, 3/4" IPS	$171.40	1.2	**Q**
Non-Diverter, Chrome-Plated, 1/2" IPS	$76.50	0.4	**R**
Diverter, Chrome-Plated, 1/2" IPS	$91.70	0.7	**S**
Diverter, Chrome-Plated Brass, 1/2" IPS	$157.80	1.3	**T**
Diverter, Chrome-Plated, 1/2" Slip-fit	$100.20	1.0	**U**
Hand Shower Systems			
24" Chrome ADA Wall Grab Bar System	$748.70	4.7	**1**
36" Chrome ADA Wall Grab Bar System	$770.70	5.5	**2**
Standard, Hand Spray Push Button, CP Plastic, 2.50 gpm, Wall Mount, 3-Position, 2/Kit	$347.60	2.0	**5**
Standard, Hand Spray Push Button, CP Plastic, 2.50 gpm, Metal Hose, 24" Glide Rail	$454.00	2.6	**8**
Standard, Hand Spray Push Button, CP Plastic, 1.80 gpm WaterSense®, Metal Hose, 24" Glide Rail	$454.00	2.6	**8WS**
Standard, Hand Spray Push Button, CP Plastic, 2.50 gpm, Metal Hose, 30" Glide Rail	$611.60	3.1	**N**
Standard, Hand Spray Push Button, CP Plastic, 1.80 gpm WaterSense®, Metal Hose, 30" Glide Rail	$611.60	3.1	**NWS**
Professional, Hand Spray Push Button, White Plastic, 2.50 gpm, Metal Hose, 18" Glide Rail	$467.50	2.5	**P**
Professional, Hand Spray Push Button, White Plastic, 2.50 gpm, Metal Hose, 24" Glide Rail	$467.50	2.5	**7**
Professional, Hand Spray Push Button, White Plastic, 1.80 gpm WaterSense®, Metal Hose, 24" Glide Rail	$467.50	2.5	**7WS**
Deluxe, Hand Spray 5 Setting, CP Plastic, 2.50 gpm, Metal Hose, 24" Glide Rail	$731.80	3.2	**6**
Deluxe, Hand Spray 5 Setting, CP Plastic, 1.80 gpm WaterSense®, Metal Hose, 24" Glide Rail	$731.80	3.2	**6WS**
Deluxe, Hand Spray 5 Setting, CP Plastic, 2.50 gpm, Metal Hose, 30" Glide Rail	$875.90	3.3	**3**
Deluxe, Hand Spray 5 Setting, CP Plastic, 1.80 gpm WaterSense®, Metal Hose, 30" Glide Rail	$875.90	3.3	**3WS**
Low Flow (1.5 gpm), Hand Spray Pause, 4 Setting, CP Plastic, Metal Hose, 24" Glide Rail, WaterSense®	$710.40	3.2	**M**
Low Flow (1.5 gpm), Hand Spray Pause, 4 Setting, CP Plastic, Metal Hose, 30" Glide Rail, WaterSense®	$804.70	3.3	**L**
Diverters			
Concealed Diverting Valve, 1/2" IPS, Metal Handle	$376.20	3.0	**Y**
Diverter, Concealed, Deluxe ABS Handle	$401.60	3.0	**A**
Diverter, Concealed, Deluxe Metal Handle	$413.40	3.0	**B**
Exposed Diverter, Shower Arm-Type, Chrome-Plated	$120.60	0.5	**Z**
Vacuum Breakers			
Vacuum Breaker, Elevated, Chrome-Plated	$528.50	2.0	**V**
Vacuum Breaker, in-Line	$81.60	1.0	**W**

HydroGuard® T/P Series e420 Valves

All HydroGuard T/P® shower valves feature advanced thermal actuator compensate for both temperature and pressure fluctuations. A built-in adjustable metal-to-metal temperature limit stop reduces chance of accidental scalding due to the over adjustment of handle. Heavy cast brass body, integral checkstop, durable brass faceplate, lever-type handles, and corrosion-resistant material provide years of trouble-free service. ASSE 1016 T/P listed and CSA B125 certified.

Model e420T12

Model e420T22

4 Ports concealed valves, 1/2" NPT inlets/outlets	Order Code	Weight	List Price
Color coded trim plate, Dome handle	**e420T12**	5.5	$1,356.00
Etched trim plate, Dome handle	**e420T22**	5.5	$1,356.00

4 Ports concealed valves, 1/2" Sweat inlets/outlets	Order Code	Weight	List Price
Color coded trim plate, Dome handle	**e420S12**	5.5	$1,356.00
Etched trim plate, Dome handle	**e420S22**	5.5	$1,356.00

Series e423 Thermostatic Valve

HydroGuard Series e423 Valves

Exposed thermostatic water mixing valve features advance thermal actuator, adjustable limit stop, polished chrome-plated lever handle and mounting bracket. ASSE 1016, CSA

Model e423320

e	4	2	3	3	2	

	List Price	Weight	Order Code
Valve			
e42332	$1,516.00	5.3	**e423**
Checkstops (Sold in Pairs)			
Straight, 1/2" IPS, Polished Chrome	$435.50	1.0	**B**
Angled with Strainer, 1/2" IPS, Polished Chrome	$621.80	2.4	**F**
Factory installation of checkstops (add suffix "X" to checkstop code) Min. order 10	$621.80	---	**X**

(Prices Effective 01/08/24)

e420 □□□□□□□□□

	List Price	Weight (lbs)	Order Code
Connections			
1/2" NPT Inlets/Outlets	$1,356.00	5.0	**T**
1/2" Sweat Inlets/Outlets	$1,356.00	5.0	**S**
Trim Plate			
Color Coded	N/C	—	**1**
Etched	N/C	—	**2**
Handle			
Dome	N/C	—	**2**
Showerheads			
Economizer, Chrome-Plated ABS, Adjustable	$34.20	0.5	**J**
Standard, Chrome-Plated Brass	$71.40	0.9	**K**
Deluxe, Chrome-Plated Brass	$115.20	1.3	**M**
Low Flow (1.5 gpm), Chrome-Plated	$179.70	2.5	**G**
Low Flow (1.5 gpm), Chrome-Plated	$142.60	0.5	**H**
Arm & Flange Kits			
Standard Arm & Flange	$53.00	0.3	**1**
Deluxe Arm & Flange	$81.60	0.4	**2**
Standard Arm/Flange & High Temp. Shut-Off	$169.60	0.6	**4**
Deluxe Arm/Flange & High Temp. Shut-Off	$200.10	0.7	**5**
Tub Spouts			
Diverter, Chrome-Plated Brass, 3/4" IPS	$171.40	1.2	**Q**
Non-Diverter, Chrome-Plated, 1/2" IPS	$76.50	0.4	**R**
Diverter, Chrome-Plated, 1/2" IPS	$91.70	0.7	**S**
Diverter, Chrome-Plated Brass, 1/2" IPS	$157.80	1.3	**T**
Diverter, Chrome-Plated, 1/2" Slip-fit	$100.20	1.0	**U**
Hand Shower Systems			
24" Chrome ADA Wall Grab Bar System	$748.70	4.7	**1**
36" Chrome ADA Wall Grab Bar System	$770.70	5.5	**2**
Standard, Hand Spray Push Button, CP Plastic, 2.50 gpm, Wall Mount, 3-Position, 2/Kit	$347.60	2.0	**5**
Standard, Hand Spray Push Button, CP Plastic, 2.50 gpm, Metal Hose, 24" Glide Rail	$454.00	2.6	**8**
Standard, Hand Spray Push Button, CP Plastic, 1.80 gpm WaterSense®, Metal Hose, 24" Glide Rail	$454.00	2.6	**8WS**
Standard, Hand Spray Push Button, CP Plastic, 2.50 gpm, Metal Hose, 30" Glide Rail	$611.60	3.1	**N**
Standard, Hand Spray Push Button, CP Plastic, 1.80 gpm WaterSense®, Metal Hose, 30" Glide Rail	$611.60	3.1	**NWS**
Professional, Hand Spray Push Button, White Plastic, 2.50 gpm, Metal Hose, 18" Glide Rail	$467.50	2.5	**P**
Professional, Hand Spray Push Button, White Plastic, 2.50 gpm, Metal Hose, 24" Glide Rail	$467.50	2.5	**7**
Professional, Hand Spray Push Button, White Plastic, 1.80 gpm WaterSense®, Metal Hose, 24" Glide Rail	$467.50	2.5	**7WS**
Deluxe, Hand Spray 5 Setting, CP Plastic, 2.50 gpm, Metal Hose, 24" Glide Rail	$731.80	3.2	**6**
Deluxe, Hand Spray 5 Setting, CP Plastic, 1.80 gpm WaterSense®, Metal Hose, 24" Glide Rail	$731.80	3.2	**6WS**
Deluxe, Hand Spray 5 Setting, CP Plastic, 2.50 gpm, Metal Hose, 30" Glide Rail	$875.90	3.3	**3**
Deluxe, Hand Spray 5 Setting, CP Plastic, 1.80 gpm WaterSense®, Metal Hose, 30" Glide Rail	$875.90	3.3	**3WS**
Low Flow (1.5 gpm), Hand Spray Pause, 4 Setting, CP Plastic, Metal Hose, 24" Glide Rail, WaterSense®	$710.40	3.2	**M**
Low Flow (1.5 gpm), Hand Spray Pause, 4 Setting, CP Plastic, Metal Hose, 30" Glide Rail, WaterSense®	$804.70	3.3	**L**
Diverters			
Concealed Diverting Valve, 1/2" IPS, Metal Handle	$376.20	3.0	**Y**
Diverter, Concealed, Deluxe ABS Handle	$401.60	3.0	**A**
Diverter, Concealed, Deluxe Metal Handle	$413.40	3.0	**B**
Exposed Diverter, Shower Arm-Type, Chrome-Plated	$120.60	0.5	**Z**
Vacuum Breakers			
Vacuum Breaker, Elevated, Chrome-Plated	$528.50	2.0	**V**
Vacuum Breaker, In-Line	$81.60	1.0	**W**

e427/e428 HydroGuard® Shower valves features advanced thermal actuator, adjustable handle rotation limit stop, stainless steel dial plate with concealed mounting screws, and color coded temperature graphics. ASSE 1016 listed CSA certified.

Model e427

Model e428

	List Price	Weight (lbs)	Order Code
Valves			
Concealed	$1,738.00	5.8	**e427***
Exposed Chrome-Plated	$1,738.00	5.7	**e428***
Checkstops (Sold in Pairs)			
Concealed Straight, 1/2" IPS	$147.70	1.1	**A**
Straight, 1/2" Sweat	$147.70	1.1	**C**
Angled, 1/2" Sweat	NLA	1.3	**D**
Angled, with Strainer, 1/2" IPS	$398.20	2.5	**E**
Exposed Straight, 1/2" IPS, Chrome-Plated	NLA	1.0	**B**
Angled, with Strainer, 1/2" IPS,	$621.80		
Chrome-Plated	$91.70	2.4	**F**
Factory installation of checkstops (Add suffix "X" to checkstop code) Min. order 10	$86.50	—	**X**
Showerheads			
Economizer, Chrome-Plated ABS, Adjustable	$34.20	0.5	**J**
Standard, Chrome-Plated Brass	$71.40	0.9	**K**
Deluxe, Chrome-Plated Brass	$115.20	1.3	**M**
Low Flow (1.5 gpm), Chrome-Plated	$179.70	2.5	**G**
Low Flow (1.5 gpm), Chrome-Plated	$142.60	0.5	**H**
Arm and Flange Kits			
Standard Arm and Flange	$53.00	0.3	**1**
Deluxe Arm and Flange	$81.60	0.4	**2**
Standard Arm/Flange & High Temp. Shut-Off	$169.60	0.6	**4**
Deluxe Arm/Flange & High Temp. Shut-Off	$200.10	0.7	**5**
Tub Spouts			
Diverter, Chrome-Plated Brass, 3/4" IPS	$171.40	1.2	**Q**
Non-Diverter, Chrome-Plated, 1/2" IPS	$76.50	0.4	**R**
Diverter, Chrome-Plated, 1/2" IPS	$91.70	0.7	**S**
Diverter, Chrome-Plated Brass, 1/2" IPS	$157.80	1.3	**T**
Diverter, Chrome-Plated, 1/2" Slip-fit	$100.20	1.0	**U**
Hand Shower Systems			
24" Chrome ADA Wall Grab Bar System	$748.70	4.7	**1**
36" Chrome ADA Wall Grab Bar System	$770.70	5.5	**2**
Standard, Hand Spray Push Button, CP Plastic, 2.50 gpm, Wall Mount, 3-Position, 2/Kit	$347.60	2.0	**5**
Standard, Hand Spray Push Button, CP Plastic, 2.50 gpm, Metal Hose, 24" Glide Rail	$454.00	2.6	**8**
Standard, Hand Spray Push Button, CP Plastic, 1.80 gpm WaterSense®, Metal Hose, 24" Glide Rail	$454.00	2.6	**8WS**
Standard, Hand Spray Push Button, CP Plastic, 2.50 gpm, Metal Hose, 30" Glide Rail	$611.60	3.1	**N**
Standard, Hand Spray Push Button, CP Plastic, 1.80 gpm WaterSense®, Metal Hose, 30" Glide Rail	$611.60	3.1	**NWS**
Professional, Hand Spray Push Button, White Plastic, 2.50 gpm, Metal Hose, 18" Glide Rail	$467.50	2.5	**P**
Professional, Hand Spray Push Button, White Plastic, 2.50 gpm, Metal Hose, 24" Glide Rail	$445.20	2.5	**7**
Professional, Hand Spray Push Button, White Plastic, 1.80 gpm WaterSense®, Metal Hose, 24" Glide Rail	$467.50	2.5	**7WS**
Deluxe, Hand Spray 5 Setting, CP Plastic, 2.50 gpm, Metal Hose, 24" Glide Rail	$731.80	3.2	**6**
Deluxe, Hand Spray 5 Setting, CP Plastic, 1.80 gpm WaterSense®, Metal Hose, 24" Glide Rail	$731.80	3.2	**6WS**
Deluxe, Hand Spray 5 Setting, CP Plastic, 2.50 gpm, Metal Hose, 30" Glide Rail	$875.90	3.3	**3**
Deluxe, Hand Spray 5 Setting, CP Plastic, 1.80 gpm WaterSense®, Metal Hose, 30" Glide Rail	$875.90	3.3	**3WS**
Low Flow (1.5 gpm), Hand Spray Pause, 4 Setting, CP Plastic, Metal Hose, 24" Glide Rail, WaterSense®	$710.40	3.2	**M**
Low Flow (1.5 gpm), Hand Spray Pause, 4 Setting, CP Plastic, Metal Hose, 30" Glide Rail, WaterSense®	$804.70	3.3	**L**
Diverters			
Concealed Diverting Valve, 1/2" IPS, Metal Handle	$376.20	3.0	**Y**
Diverter, Concealed, Deluxe ABS Handle	$401.60	3.0	**A**
Diverter, Concealed, Deluxe Metal Handle	$413.40	3.0	**B**
Exposed Diverter, Shower Arm-Type,Chrome-Plated	$120.60	0.5	**Z**
Vacuum Breakers			
Vacuum Breaker, Elevated, Chrome-Plated	$528.50	2.0	**V**
Vacuum Breaker, In-Line	$81.60	1.0	**W**

***For Shower or Bath only application. Not suitable for Combination Bath & Shower application**

(Prices Effective 01/08/24)

LEAD FREE*

HydroGuard® Series LFG480/LFE480 Lavatory Thermostatic Mixing Valves

Under the counter thermostatic mixer for lavatory applications.

ASSE 1070, cUPC, and NSF 61-9 & 372 listed. Integral checks. Solid brass construction. Adjustable temperature with locking feature.

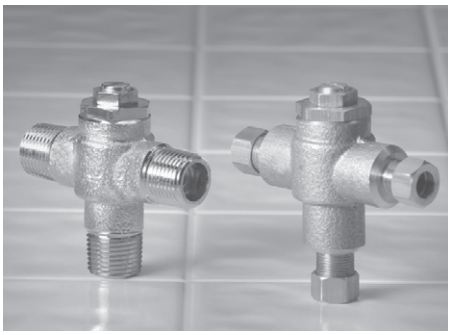

Description	Order Code	Weight	List Price
1/2" NPT inlets and outlet, Minimum Flow 0.25gpm	LFG480-00Q	1.00	$438.30
1/2" NPT inlets and outlet, Minimum Flow 0.25gpm, Chrome Plated	LFG480-01Q	1.00	$512.30
3/8" Compression inlets & outlet, Minimum Flow 0.25gpm	LFG480-10Q	1.00	$438.30
3/8" Compression inlets & outlet, Minimum Flow 0.25gpm, Chrome Plated	LFG480-11Q	1.00	$512.30
3/8" Quick Connect, Minimum Flow 0.25gpm	LFG480-50	1.10	NLA
3/8" Quick Connect, Minimum Flow 0.25gpm, Chrome plated	LFG480-51	1.10	NLA
1/2" NPT inlets and outlet, Minimum Flow 0.5gpm	LFE480-00Q	1.00	$438.30
1/2" NPT inlets & outlet, Chrome Plated, Minimum Flow 0.5gpm	LFE480-01Q	1.00	$512.30
3/8" Compression inlets & outlet, Minimum Flow 0.5gpm	LFE480-10Q	1.00	$438.30
3/8" Compression inlets & outlet, Chrome Plated, Minimum Flow 0.5gpm	LFE480-11Q	1.00	$512.30
3/8" Quick Connect, Minimum Flow 0.5gpm	LFe480-50	1.08	NLA
3/8" Quick Connect, Chrome Plated, Minimum Flow 0.5gpm	LFe480-51	1.06	NLA

LEAD FREE*

HydroGuard® Series LFLM490

HydroGuard® Series LFLM490 Thermostatic Mixing Valves for Hot Water Heaters

All HydroGuard Series LFLM490 Valves feature advanced thermal actuator, adjustable lock-in handle design, solid brass construction and integral check valves and screens. ASSE 1017 Certified, IAPMO cUPC Certified and approved to CSA B125.3, NSF/ANSI/CAN 61 & NSF/ANSI/CAN 372 Certified.

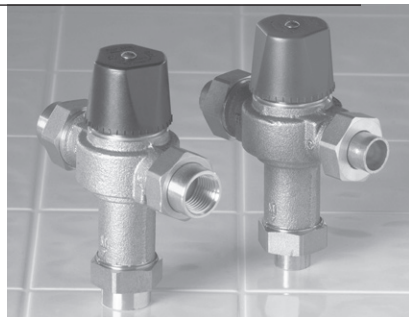

Temperature Range 90°- 160°F (32° - 71°C) **Model LFLM49 ☐ ☐**

Temperature Range 60° - 120° F (16° - 49° C) **Model LFLM49 ☐-10 ☐**

Valve	List Price	Weight	Order Code
1/2"	$455.30	1.8	**0**
3/4"	$575.60	2.3	**1**
1"	$689.80	2.9	**2**
Inlets/Outlets			
Union NPT Female	N/C	—	**1**
Union Sweat	N/C	—	**2**
Union CPVC	N/C	—	**3**
Union PEX	N/C	—	**4**
**Union PEX F1960 (CEF)	N/C	—	**6**
Quick-Connect			
1/2"	$83.20	—	**5**
3/4"	$120.50	—	**5**
1"	$140.30	—	**5**
With Press			
1/2"	$100.20	—	**1-w/Press**
3/4"	$118.90	—	**1-w/Press**
1"	$192.70	—	**1-w/Press**

**For sizes 1/2" and 3/4" standard temperature range only

*The wetted surface of this product contacted by consumable water contains less than 0.25% of lead by weight.

LEAD FREE*

HydroGuard® Series LFLM495 Thermostatic Mixing Valves for Individual Lavatory Installations

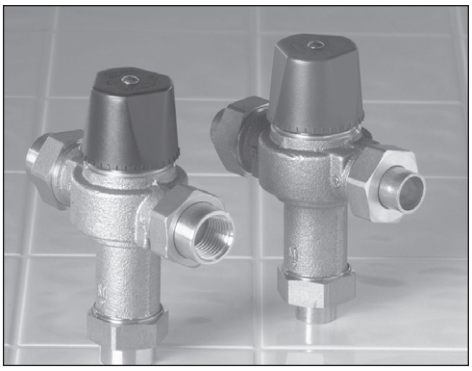

All HydroGuard® Series LFLM495 valves feature advanced thermal actuator, adjustable lock-in handle design, solid brass construction and integral check valves and screens. ASSE 1017, ASSE 1069, ASSE 1070 Certified, IAPMO cUPC Certified and Approved to CSA B125.3 and CSA B125.70, NSF/ANSI/CAN 61 & NSF/ANSI/CAN 372 Certified.

1017
1069
1070

Model LFLM49 ☐ - ☐

Temperature Range 80° - 120° F (27° - 49° C)

Valve	List Price	Weight	Order Code
1/2"	$481.50	1.8	5
3/4"	$607.90	2.3	6
1"	$715.80	2.9	7
Inlets/Outlets			
Union NPT Female	N/C	—	1
Union Sweat	N/C	—	2
Union CPVC	N/C	—	3
Union PEX	N/C	—	4
**Union PEX F1960 (CEF)	N/C	—	6
Quick-Connect			
1/2"	$85.00	—	5
3/4"	$120.30	—	5
1"	$143.70	—	5
With Press			
1/2"	$98.70	—	1-w/Press
3/4"	$120.30	—	1-w/Press
1"	$191.30	—	1-w/Press

**For sizes 1/2" and 3/4" only

Hot Water Tank Capacity Extender

The hot water tank capacity extender increases hot water capacity as much as 133% depending on storage and cold water temperature flow.

	List Price	Weight	Ordering Code
3/4" Inlets & Outlet	$711.20	3.0	LFLM496-HTK

*The wetted surface of this product contacted by consumable water contains less than 0.25% of lead by weight.

HydroGuard® XP Thermostatic Series LFMM430

LEAD FREE*

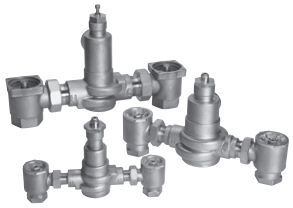

The HydroGuard® XP series LFMM430 is a temperature actuated mixing valve designed for use in hot water distribution system, in compliance with ASSE 1017 standard. Valve features advance paraffin actuation technology, dirt and lime resistant poppet and seat design and vandal resistant locking mechanism. Valve are available in two temperature ranges.

Valve	Rough Bronze		Chrome Plated	
	Standard (90-160°F)	Low (60-90°F)	Standard (90-160°F)	Low (60-90°F)
LFMM431 3/4 x 3/4	LFMM431-10 $2,516.00	LFMM431-30 $2,516.00	LFMM431-20 $3,609.00	LFMM431-40 $3,609.00
LFMM432 3/4 x 1	LFMM432-10 $3,006.00	LFMM432-30 $3,006.00	LFMM432-20 $3,966.00	LFMM432-40 $3,966.00
LFMM433 1 1/4 x 1 1/4	LFMM433-10 $3,532.00	LFMM433-30 $3,532.00	LFMM433-20 $5,087.00	LFMM433-40 $5,087.00
LFMM434 1 1/4 x 1 1/2	LFMM434-10 $4,458.00	LFMM434-30 $4,458.00	LFMM434-20 $5,162.00	LFMM434-40 $5,162.00
LFMM435 2 x 2	LFMM435-10 $6,202.00	LFMM435-30 $6,202.00	LFMM435-20 $7,108.00	LFMM435-40 $7,108.00

HydroGuard® XP Series LFMM430 Supply Fixtures

How to specify and order a supply fixture:

LF □□□□□ □□□□□□□

Valves (capacity at 45 psi) — **Order Code**
- 23 gpm (87 lpm) . . . **LM490**
- 42 gpm (159 lpm) . . . **MM431**
- 64 gpm (242 lpm) . . . **MM432**
- 110 gpm (416 lpm) . . . **MM433**
- 144 gpm (545 lpm) . . . **MM434**
- 208 gpm (787 lpm) . . . **MM435**

Valve and Pipe Finish
- Rough Bronze . . . **A**
- Chrome Plated . . . **C**

Piping Inlets/Outlets
- Top/Top . . . **D**
- Bottom/Top . . . **E**
- Bottom/Bottom . . . **F**
- Bottom/Side . . . **G**

Cabinet Style
- Exposed, no cabinet . . . **M**
- Stainless Steel, Recessed . . . **N**
- Stainless Steel, Semi-Recessed . . . **P**
- Stainless Steel, Wall Mounted . . . **Q**
- Painted, Recessed . . . **R**
- Painted, Semi-Recessed . . . **T**
- Painted, Wall Mounted . . . **U**

Temperature Range
- Standard—90°F to 160°F (32°C to 71°C) . . . **S**
- Low**—60°F to 90°F (16°C to 32°C) . . . **W**

Options
- None . . . **0**
- Cold Water Bypass . . . **2**
- Combination T/P Gauge on inlets . . . **4**
- Cold Water Bypass & Combination T/P Gauge on inlets . . . **6**

Alarm System (Not Installed)
- None . . . **0**
- AquaSentry2 Alarm System . . . **4**

View Port
- None . . . **0**
- Window . . . **W**

** Not available with LFLM490.

Note: Supply fixtures are made to order (MTO) and are not returnable or subject to credit.

*The wetted surface of this product contacted by consumable water contains less than 0.25% of lead by weight.

LEAD FREE*

HydroGuard® XP Series LFMM430 Supply Fixtures

How to Determine the Price of a Supply Fixture

Determine the base price by looking in the first two columns of this chart, under "Valve and Pipe Finish." This price includes the valve and standard piping kit, dial thermometer, and a standard temperature range motor. If a cabinet, a high or low temperature motor or an optional piping kit is required, add the list price shown below to the base price.

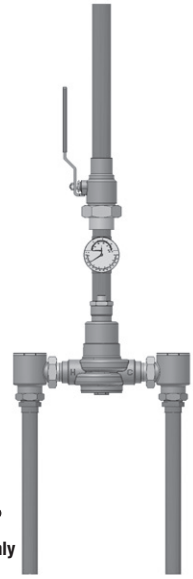

Valve only

Model LFMM432AEMS00

	Valve and Pipe Finish		Cabinet Style	
	Rough Bronze	Chrome Plated	Stainless Steel	Painted
Order Code	A	C	N, P, Q	R, T, U
LFLM490	$2,970.00	$3,258.00	$3,054.00	$2,036.00
LFMM431	$4,434.00	$4,877.00	$3,792.00	$2,240.00
LFMM432	$5,358.00	$5,655.00	$3,792.00	$2,240.00
LFMM433	$6,222.00	$6,984.00	$3,792.00	$2,240.00
LFMM434	$7,513.00	$8,442.00	$3,792.00	$2,240.00
LFMM435	$9,954.00	$11,936.00	$4,529.00	$2,967.00

Options						Standard Items
Order Code	Cold Water Bypass	Combination T/P Gauge on Inlets	Cold Water Bypass & Comb. T/P Gauge on Inlets	AquaSentry2	View Port	Available at No Charge
	2	4	6	4	W	D, E, F, G, M, S
LFLM490	$1,510.00	$551.50	$2,054.00	$6,749.00	$412.40	N/C
LFMM431	$1,950.00	$678.20	$2,619.00	$6,801.00	$412.40	N/C
LFMM432	$2,253.00	$678.20	$2,929.00	$7,009.00	$412.40	N/C
LFMM433	$2,541.00	$819.30	$3,346.00	$7,149.00	$412.40	N/C
LFMM434	$2,865.00	$819.30	$3,671.00	$7,284.00	$412.40	N/C
LFMM435	$3,570.00	$1,020.00	$4,580.00	$9,025.00	$412.40	N/C

Note: Supply fixtures are made to order (MTO) and are not returnable or subject to credit.

*The wetted surface of this product contacted by consumable water contains less than 0.25% of lead by weight.

HydroGuard® XP Single Valve HiLo Series LFSH1430

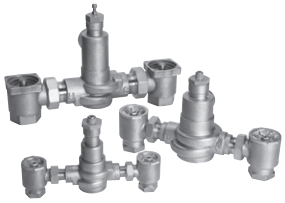

The HydroGuard® XP series LFSH1430 is a temperature actuated mixing valve designed for use in hot water distribution system, in compliance with ASSE 1017 standard. Valve features advanced paraffin actuation technology, dirt and lime resistant poppet and seat design and vandal resistant locking mechanism. Valve is available in two temperature ranges.

Valve	Valve Only			
	Rough Bronze		Chrome Plated	
	Standard (90-160°F)	Low (60-90°F)	Standard (90-160°F)	Low (60-90°F)
LFSH1432	LFSH1432-10	LFSH1432-30	LFSH1432-20	LFSH1432-40
3/4 x 1	$6,348.00	$6,348.00	$6,762.00	$6,762.00
LFSH1434	LFSH1434-10	LFSH1434-30	LFSH1434-20	LFSH1434-40
1 1/4 x 1 1/2	$9,067.00	$9,067.00	$9,588.00	$9,588.00
LFSH1435	LFSH1435-10	LFSH1435-30	LFSH1435-20	LFSH1435-40
2 x 2	$10,878.00	$10,878.00	$11,664.00	$11,664.00
	Valve w/Temperature/Pressure Gauge on Outlet\			
Valve	Rough Bronze		Chrome Plated\	
	Standard (90-160°F)	Low (60-90°F)	Standard (90-160°F)	Low (60-90°F)
LFSH1432	LFSH1432-11	LFSH1432-31	LFSH1432-22	LFSH1432-42
3/4 x 1	$6,765.00	$6,765.00	$7,259.00	$7,259.00
LFSH1434	LFSH1434-13	LFSH1434-33	LFSH1434-24	LFSH1434-44
1 1/4 x 1 1/2	$9,715.00	$9,715.00	$10,218.00	$10,218.00
LFSH1435	LFSH1435-15	LFSH1435-35	LFSH1435-26	LFSH1435-46
2 x 2	$11,714.00	$11,714.00	$12,326.00	$12,326.00

HydroGuard® XP Series LFSH1430 Supply Fixtures

LF □□□□□□ □ □ □ □ □ □ □ □

How to specify and order a supply fixture:

	SH1432	SH1434	SH1435	Order Code
Valve and Piping Finish				
Rough Bronze	$6,672.00	$9,519.00	$12,301.00	A
Chrome Plated	$7,592.00	$10,687.00	$14,003.00	C
Piping Inlets/Outlet				
Top/Top	N/C	N/C	N/C	D
Bottom/Top	N/C	N/C	N/C	E
Bottom/Bottom	N/C	N/C	N/C	F
Bottom/Side	N/C	N/C	N/C	G
Cabinet Style				
Exposed, no cabinet	N/C	N/C	N/C	M
Stainless Steel, Recessed	$3,786.00	$3,786.00	$3,786.00	N
Stainless Steel, Semi-Recessed	$3,786.00	$3,786.00	$3,786.00	P
Stainless Steel, Wall Mounted	$3,786.00	$3,786.00	$3,786.00	Q
Painted, Recessed	$2,240.00	$2,240.00	$2,967.00	R
Painted, Semi-Recessed	$2,240.00	$2,240.00	$2,967.00	T
Painted, Wall Mounted	$2,240.00	$2,240.00	$2,967.00	U
Temperature Range				
Standard—90°F to 160°F (32°F to 71°C)	N/C	N/C	N/C	S
Low—60°F to 90°F (16°F to 32°C)	N/C	N/C	N/C	W
Option				
None	N/C	N/C	N/C	0
Cold Water Bypass	$2,253.00	$2,864.00	$3,568.00	2
Combination T/P Gauge on Inlets	$678.50	$815.80	$1,018.00	4
Cold Water Bypass & Combination T/P Gauge on Inlets	$2,928.00	$3,667.00	$4,580.00	6
Alarm System (Not Installed)				
None	N/C	N/C	N/C	0
AquaSentry2 Alarm System	$5,885.00	$7,284.00	$9,024.00	4
View Port				
None	N/C	N/C	N/C	0
Window	$412.40	$412.40	$412.40	W

Note: Supply fixtures are made to order (MTO) and are not returnable or subject to credit.

*The wetted surface of this product contacted by consumable water contains less than 0.25% of lead by weight.

HydroGuard® LF Recirculation Loop with Automatic Balancing System

LEAD FREE*

The Lead Free HydroGuard® water tempering recirculating loop is an economical way to provide a safe, balanced system for stand alone master tempering valves. The system monitors return line temperature and automatically directs water to the cold side of the tempering valve (if within the set point) or to the hot water source (if below the set point).

Valve only

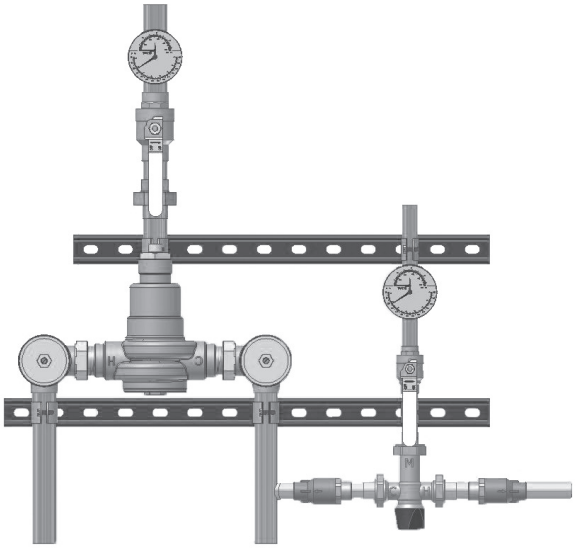

LF R □□□□□□ **A** □ □ □

Valve Capacity @ 45 gpm	List Price	Order Code
42 gpm (159 lpm)	$6,274.00	**MM431**
64 gpm (242 lpm)	$6,884.00	**MM432**
110 gpm (416 lpm)	$7,922.00	**MM433**
144 gpm (545 lpm)	$9,123.00	**MM434**
208 gpm (787 lpm)	$11,116.00	**MM435**
57 gpm (216 lpm)	$8,159.00	**SH1432**
127 gpm (481 lpm)	$10,706.00	**SH1434**
201 gpm (761 lpm)	$12,694.00	**SH1435**
Valve & Piping Finish		
Rough Bronze	N/C	**A**
Return Size		
3/4"	N/C	**B**
1"	$454.30	**C**
Temperature Range		
Standard (90˚ - 160˚F)	N/C	**S**
Low (60˚ - 90˚F)	N/C	**W**
Alarm System (not installed)		
None	N/C	**0**
AquaSentry2 for LFMM431	$6,801.00	**1**
AquaSentry2 for LFMM432	$7,009.00	**2**
AquaSentry2 for LFMM433	$7,148.00	**3**
AquaSentry2 for LFMM434	$7,284.00	**4**
AquaSentry2 for LFMM435	$9,024.00	**5**
AquaSentry2 for LFSH1432	$5,885.00	**6**
AquaSentry2 for LFSH1434	$7,284.00	**7**
AquaSentry2 for LFSH1435	$9,024.00	**8**

Note: These products are specially made and are not returnable or subject to credit.

*The wetted surface of this product contacted by consumable water contains less than 0.25% of lead by weight.

(Prices Effective 01/08/24)

Hi/Lo Supply Fixtures

Hi/Lo Supply Fixtures include two master mixing valves, a pressure regulating valve, outlet thermometer, shutoff valve, and pressure gauges. Piping configuration is bottom inlets/top outlet. For other configurations, consult Powers Technical Support Department.

Valve only

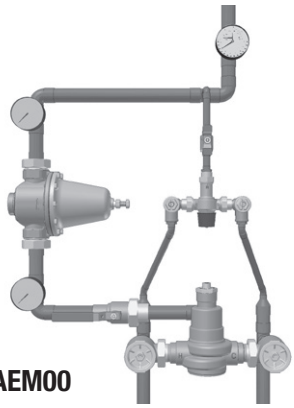

LFMM432HLAEM00

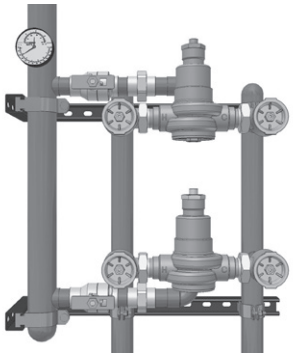

LFSH1434DVAEM00

LF ☐☐☐☐☐☐☐☐ ☐ ☐ ☐ ☐ ☐

Valve Configuration	Capacity	Inlets	Outlet	List Price	Order Code
LFLM490/LFMM431	0.5 - 65 gpm	3/4"	3/4"	$11,525.00	**MM431HL**
LFLM490/LFMM432	0.5 - 87 gpm	3/4"	1"	$12,535.00	**MM432HL**
LFLM490/LFMM433	0.5 - 133 gpm	1-1/4"	1-1/4"	$13,623.00	**MM433HL**
LFLM490/LFMM434	0.5 - 167 gpm	1-1/4"	1-1/2"	$14,709.00	**MM434HL**
LFMM431/LFMM434	3.0 - 186 gpm	1-1/4"	1-1/2"	$17,840.00	**MM435HL**
Larger Size					
LFMM434/LFSH1432	1.0 - 201 gpm	1-1/2"	2"	$18,387.00	**SH1432HL**
LFMM434/LFSH1434	1.0 - 271 gpm	2"	2-1/2"	$19,480.00	**SH1434HL**
LFSH1432/LFSH1434	2.0 - 184 gpm	1-1/2"	2"	$16,601.00	**SH1432DV**
LFSH1434/LFSH1434	2.0 - 251 gpm	2"	2-1/2"	$18,736.00	**SH1434DV**
LFSH1435/LFSH1435	10 - 402 gpm	4"	4"	$35,488.00	**SH1435DV**

Finish		
Rough Bronze	N/C	**A**
Piping Inlets/Outlet		
Bottom/Top	N/C	**E**
Top/Top	$631.20	**D**
Cabinet		
Exposed, No Cabinet	N/C	**M**
Stainless Steel, Recessed	$6,458.00	**N**
Stainless Steel, Wall Mounted	$6,458.00	**Q**
Painted, Recessed	$5,540.00	**R**
Painted, Wall Mounted	$5,540.00	**U**
Alarm (not installed)**		
None	N/C	**0**
AquaSentry2 for LFMM431	$6,801.00	**1**
AquaSentry2 for LFMM432	$7,009.00	**2**
AquaSentry2 for LFMM433	$7,148.00	**3**
AquaSentry2 for LFMM434	$7,284.00	**4**
AquaSentry2 for LFMM435	$7,284.00	**5**
AquaSentry2 for LFSH1432DV	$9,024.00	**6**
AquaSentry2 for LFSH1432HL	$9,024.00	**7**
View Port		
None	N/C	**0**
Window	$412.50	**W**

*The wetted surface of this product contacted by consumable water contains less than 0.25% of lead by weight.
**Not available with LFSH1434DV, LFSH1434HL & LFSH1435DV

Note: These products are specially made and are not returnable or subject to credit.

HydroGuard® XP High Capacity Systems
Series LFSH1430

Powers' High Capacity Systems are fully assembled and factory tested. They are designed to provide safe tempered water throughout commercial and institutional facilities. They consist of LFMM434 and LFSH1434 HydroGuard® XP thermostatic tempering valves. Each system includes ball valves, thermometers, pressure gauges, triple-duty check valves and PRV. Each system is supported by heavy-duty welded struts. Piping configuration is bottom inlets and top outlets.

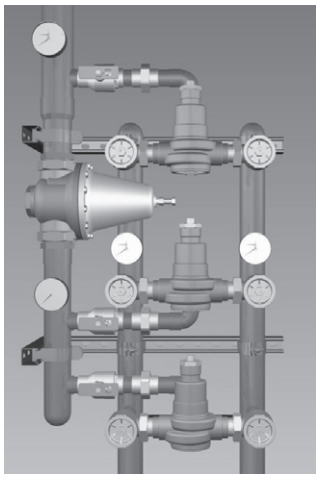

LFSH1434TVAEM0

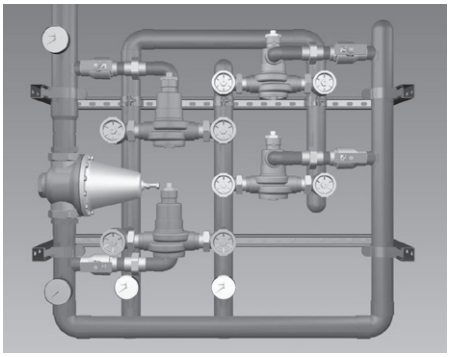

LFSH1434QVAEM0

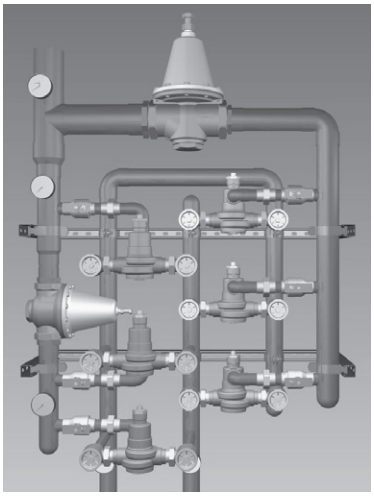

LF14346VAEM0

Valve only

LF □□□□ □□□□ □□□□

Valve Configuration	Capacity	Inlets	Outlet	List Price	Order Code
1- LFSH1434 & 2- LFMM434	1.0 - 416 gpm	2-1/2"	3"	Per Application Contact POWERS	SH1434TV
1- LFSH1434 & 3- LFMM434	1.0 - 559 gpm	2-1/2"	3"		SH1434QV
1- LFSH1434 & 5- LFMM434	1.0 - 847 gpm	2-1/2"	4"		SH14346V

Finish

Rough Bronze	N/C	**A**

Piping Inlets/Outlet

Bottom/Top	N/C	**E**

Cabinet

Exposed, No Cabinet	N/C	**M**
Stainless Steel, Wall Mounted	Per Application Contact Powers	**Q**
Painted, Wall Mounted		**U**

Alarm (Not Installed)

None	N/A	**0**

Note: These products are specially made and are not returnable or subject to credit.

*The wetted surface of this product contacted by consumable water contains less than 0.25% of lead by weight.

(Prices Effective 01/08/24)

LEAD FREE*

The IntelliStation™ is a digital water mixing station and recirculation system providing user-directed control and monitoring of water distribution system. IntelliStation™ includes an electronic control module featuring a color touch screen digital display to select desired outlet water temperature, an electronically actuated valve, temperature sensors (plus a quick response temperature sensor), pressure sensors and check valves. The IntelliStation™ monitors hot supply inlet temperature, hot supply pressure, mixed outlet temperature, mixed outlet pressure, return temperature, and return pressure to help maintain the desired outlet temperature. IntelliStation™ also features a user programmable high temperature Sanitization mode to help limit water-borne bacteria as part of a user-directed and controlled thermal eradication protocol. Each IntelliStation™ is mounted on heavy-duty, welded struts as a complete unit. Optional equipment includes engineer specified circulator, flow/BTU package and strainers. The IntelliStation™ Control Module supports building automation system (BAS) communication with BACnet® IP, BACnet® MSTP, and Modbus® protocols, allowing remote programing and data viewing.

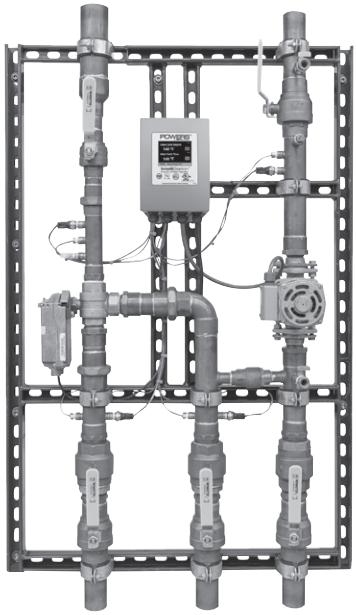

Shown with optional pump

Standard Capacity

Valve	Inlets	Outlet		Order Code
LFIS150	2"	2 1/2"	Per Application Contact Powers	LFIS150
LFIS200	2 1/2"	3"		LFIS200

Return Pipe Size

1"	C
2"	F

Flow/BTU Package

None	O
Flow/BTU Package	F

Strainers**

None	O
On inlets	S

Pump

Less Pump	LP
Pump Assigned by Factory	--

Must Provide Following Pump Information to Factory to Select the Pump:

Pump Manufacturer: _____

Their Part/Model # _____

System Head Loss _____

Required Flow to Maintain Recirculating Temperature _____

**Strainer ship loose and must be installed by a plumber at the jobsite.

High Capacity

Valve	Inlets	Outlet		Order Code
LFIS150/LFIS150	4"	4"	Per Application Contact Powers	LFIS150DV
LFIS200/LFIS200	6"	6"		LFIS200DV
LFIS200/LFIS200/ LFIS200	6"	6"		LFIS200TV

Return Pipe Size

3"	H

Flow/BTU Package

None	O
Flow/BTU Package	F

Strainers

None	O
On inlets	S

Pump

Less Pump	LP
Pump Assigned by Factory	--

Must Provide Following Pump Information to Factory to Select the Pump:

Pump Manufacturer: _____

Their Part/Model # _____

System Head Loss _____

Required Flow to Maintain Recirculating Temperature _____

Note: These products are specially made and are not returnable or subject to credit.

*The wetted surface of this product contacted by consumable water contains less than 0.25% of lead by weight.

+ Listed without pump

Works with the Watts® OnSite Mobile and Web App

The IntelliStation Jr. with IoT capabilities is a digital mixing valve that allows users to remotely control and monitor tempered water distribution. Achieve safety at a glance with remote visibility on the Watts OnSite mobile and web app. Select your desired outlet water temperature on the controller with its full-color touchscreen display, or from the app which is password-protected with 3 user levels for security. It controls the outlet temperature to +/- 2°F of set point in compliance with ASSE 1017. Connectivity to the BAS is standard in both BACnet and Modbus protocols. Temperature setback feature contributes to energy efficiency and savings. The valve also features a high-temperature sanitization mode to help mitigate the risk of waterborne bacteria as part of a user-directed and controlled thermal eradication protocol.

1017 — *Valve Only*

LISTED E365015 Temp. Ind. and Reg. Equip. — *Controller Only*

Standard Capacity

Valve	Inlets	Outlet	List Price	Order Code
LFIS075VL	3/4"	3/4"	Contact Powers	**LFIS075VL**
LFIS100VL	1"	1 1/4"		**LFIS100VL**
LFIS150VL	1 1/2"	1 1/2"		**LFIS150VL**
LFIS200VL	2"	2"		**LFIS200VL**

Options Available

Cabinets

Stainless Steel, Wall Mounted	Contact Powers	**Q**
Painted, Wall Mounted		**U**

View Port

None	Contact Powers	**O**
Window		**W**

IntelliStation® Jr. System

Valve	Inlets	Outlet	List Price	Order Code
LFIS075VL	1"	1"	Contact Powers	**LFIS075VL-SYS075RTN**
LFIS100VL	1 1/4"	1 1/2"		**LFIS100VL-SYS100RTN**
LFIS150VL	2"	2"		**LFIS150VL-SYS150RTN**
LFIS200VL	2 1/2"	2 1/2"		**LFIS200VL-SYS200RTN**

LEAD FREE*

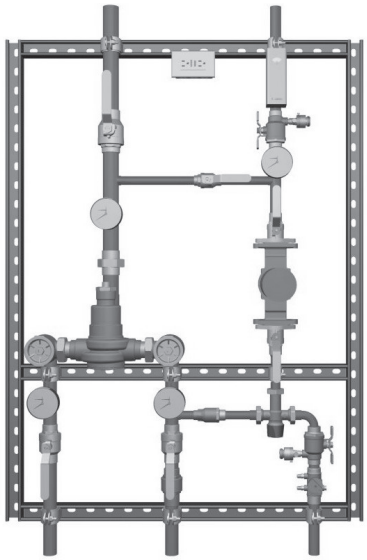

Shown with optional pump

PowerStation is a complete, fully assembled water tempering system, designed to provide safe tempered water throughout commercial and institutional facilities. PowerStation features the HydroGuard® XP LFMM430 or LFSH1430 tempering series valve with advanced thermal actuation technology. Each PowerStation is mounted on heavy-duty, welded struts and is factory tested as a complete system. Each PowerStation includes an engineer specified circulator, GFCI outlet, combination temperature/pressure gauges and Powers' triple-duty checkstops and internal bypass loop for fast and easy set-up. Optional equipment includes an Aquastat and/or Powers' exclusive automatic balancing valve.

Valve only

LF PS ☐ ☐ ☐ ☐ ☐ ☐

Valve	Capacity	Inlet	Outlet	List Price	Order Code
LFSH1432	1 - 57 gpm	3/4"	1"	Per Application Contract Powers	A
LFSH1434	1 - 127 gpm	1-1/4"	1-1/2"		B
LFSH1435	5 - 201 gpm	2"	2"		N
LFMM431	3 - 42 gpm	3/4"	3/4"		C
LFMM432	4 - 64 gpm	3/4"	1"		D
LFMM433	5 - 110 gpm	1-1/4"	1-1/4"		E
LFMM434	7 - 144 gpm	1-1/4"	1-1/2"		F
LFMM435	10 - 208 gpm	2"	2"		G

Controls

None	0
Aquastat	A
Aqua Sentry® 2**	B
Aquastat & Aqua Sentry® 2**	C

Balancing Valves

None	0
Automatic Balancing Valve	B

Return Pipe Size

1/2"	A
3/4"	B
1"	C
1-1/4"	D
1-1/2"	E
2"	F

Assigned by Factory --

Pump Information:

Call Powers Technical Service at (888) 432-8932 for pump selection. You must provide the following information. Pump shall be lead free.

System Head Loss _____

Required Flow to Maintain Recirculating Temp. _____

Note: These products are specially made and are not returnable or subject to credit.

*The wetted surface of this product contacted by consumable water contains less than 0.25% of lead by weight.
**Aqua Sentry® 2 - not installed

LEAD FREE*

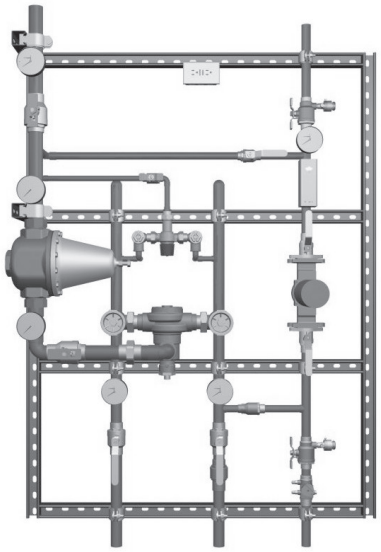

Shown with optional pump

PowerStation™ is a complete, fully assembled water tempering system, designed to provide safe tempered water throughout commercial and institutional facilities. PowerStation™ features the HydroGuard® XP LFLM490, LFMM430 and/or LFSH1430 tempering series valve with advanced thermal actuation technology. Each PowerStation™ is mounted on heavy-duty, welded struts and is factory tested as a complete system. It also includes an engineer specified circulator, GFCI outlet, combination temperature/pressure gauges, Powers' triple-duty checkstops and internal bypass loop for fast and easy set-up. Optional equipment includes an Aquastat and/or Powers' exclusive automatic balancing valve.

Valve only

LF PS ☐ ☐ ☐ ☐ ☐ ☐

Valve	Capacity	Inlets	Outlet	List Price	Order Code
LFMM431HL	0.5 - 65 gpm	3/4"	3/4"	Per Application Contact POWERS	H
LFMM432HL	0.5 - 87 gpm	3/4"	1"		J
LFMM433HL	0.5 - 133 gpm	1-1/4"	1-1/4"		K
LFMM434HL	0.5 - 167 gpm	1-1/4"	1-1/2"		L
LFMM435HL	3 - 186 gpm	1-1/4"	1-1/2"		M
LFSH1432HL	1 - 201 gpm	1-1/2"	2"		P
LFSH1434HL	1 - 271 gpm	2"	2-1/2"		Q
LFSH1432DV	2 - 184 gpm	1-1/2"	2"		S
LFSH1434DV	2 - 251 gpm	2"	2-1/2"		T
LFSH1434TV	1 - 416 gpm	2-1/2"	3"		W
LFSH1435DV	10 - 402 gpm	4"	4"		X

Controls

None	O
Aquastat	A
Aqua Sentry® 2**	B
Aquastat & Aqua Sentry® 2**	C

Balancing Valve

None	O
Automatic Balancing Valve	B

Return Pipe Size

1/2"	A
3/4"	B
1"	C
1-1/4"	D
1-1/2"	E
2"	F

Assigned by Factory --

Pump Information:

Call Powers Technical Service at (888) 432-8932 for pump selection. You must provide the following information. Pump shall be lead free.

System Head Loss _____

Required Flow to Maintain Recirculating Temp. _____

Note: These products are specially made and are not returnable or subject to credit.

*The wetted surface of this product contacted by consumable water contains less than 0.25% of lead by weight.
**Aqua Sentry® 2 - not installed and not available on LFSH1434HL, LFSH1434DV, LFSH1434TV, LFSH1435DV.

HydroGuard® XP Emergency Tempering Valves with Cold Water Bypass

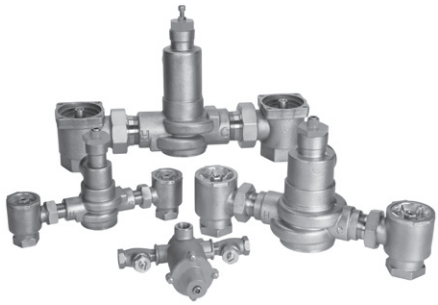

The HydroGuard® XP Emergency Tempering valves, with cold water bypass, are designed to use with emergency fixtures in compliance with ANSI Z358.1 2014 and are ASSE 1071 listed. Valves feature advanced paraffin actuation technology, dirt and lime resistant poppet and seat design and vandal resistant locking mechanism. Valves are available in two finishes.

	Valve Only	
Valve	**Rough Bronze**	**Chrome Plated**
ES150 1/2 x 1/2	**ES150-10** $1,839.00	**ES150-20** $2,065.00
ETV200 3/4 x 1	**ETV200-10** $2,891.00	**ETV200-20** $3,234.00
ETV400 1 1/4 x 1 1/2	**ETV400-10** $4,502.00	**ETV400-20** $4,932.00
ETV500 2 x 2	**ETV500-10** $6,139.00	**ETV500-20** $6,706.00

	Valve w/Temperature/Pressure Gauge on Outlet	
Valve	**Rough Bronze**	**Chrome Plated**
ES150 1/2 x 1/2	**ES150-11** $1,913.00	**ES150-22** $2,176.00
ETV200 3/4 x 1	**ETV200-13** $3,263.00	**ETV200-24** $3,376.00
ETV400 1 1/4 x 1 1/2	**ETV400-15** $4,709.00	**ETV400-26** $5,371.00
ETV500 2 x 2	**ETV500-17** $6,425.00	**ETV500-28** $6,997.00

HydroGuard® XP Emergency Tempering Valves with Cold Water Bypass

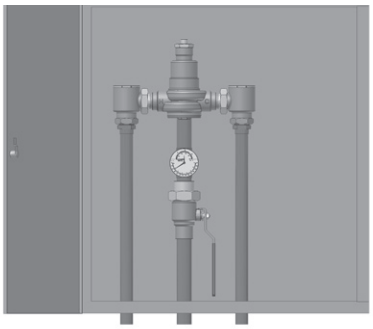

The HydroGuard® XP Emergency Tempering valves, with cold water bypass, are designed to use with emergency fixtures in compliance with ANSI Z358.1 2004 and are ASSE 1071 listed. Valves feature advanced paraffin actuation technology, dirt and lime resistant poppet and seat design and vandal resistant locking mechanism. Valves are available in two finishes.

Valve Only

	ES150	ETV200	ETV400	ETV500	Ordering Code
Valve and Piping Finish					
Rough Bronze	$2,193.00	$3,456.00	$5,278.00	$6,068.00	**A**
Chrome Plated	$2,506.00	$4,028.00	$6,416.00	$7,129.00	**B**
Piping Inlets/Outlet					
Top/Top	N/C	N/C	N/C	N/C	**D**
Top/Bottom	N/C	N/C	N/C	N/C	**M**
Bottom/Top	N/C	N/C	N/C	N/C	**E**
Bottom/Bottom	N/C	N/C	N/C	N/C	**F**
Bottom/Side	N/C	N/C	N/C	N/C	**G**
Cabinet Style					
Exposed, no cabinet	N/C	N/C	N/C	N/C	**0**
Stainless Steel, Recessed	$2,145.00	$3,692.00	$3,692.00	$4,408.00	**N**
Stainless Steel, Semi-Recessed	$2,145.00	$3,692.00	$3,692.00	$4,408.00	**P**
Stainless Steel, Wall Mounted	$2,145.00	$3,692.00	$3,692.00	$4,408.00	**Q**
Painted, Recessed	$1,791.00	$2,181.00	$2,181.00	$2,889.00	**R**
Painted, Semi-Recessed	$1,791.00	$2,181.00	$2,181.00	$2,889.00	**T**
Painted, Wall Mounted	$1,791.00	$2,181.00	$2,181.00	$2,889.00	**U**
Option					
None	N/C	N/C	N/C	N/C	**0**
T/P Gauge on Inlets	$406.60	$501.60	$604.80	$755.50	**5**
Alarm System (not installed)					
None	N/C	N/C	N/C	N/C	**0**
AquaSentry2	$6,528.00	$6,825.00	$7,094.00	$8,789.00	**4**
View Port					
None	N/C	N/C	N/C	N/C	**0**
Window	$401.60	$401.60	$401.60	$401.60	**W**

Note: These products are made to order (MTO) and are not returnable or subject to credit.

(Prices Effective 01/08/24)

Hydropanel II Modular Shower Systems with e700 T/P Series Valve

Hydropanel II Shower Systems are constructed from stainless steel. They feature HydroGuard T/P Series e700 combination mixing valves with ABS or Metal handles, vandal-resistant fasteners, color-coded graphics, end caps, and are factory-tested and pre-assembled.

Valve Only

Model 4507100

Model 4507054

Hydropanel II with e705 Combination Mixing Valves with ABS Handles

Description	Order Code	Weight (lbs.)	List Price
Fixed Showerhead and Soap Dish	**4507050**	15.0	$2,130.00
Fixed Showerhead, less Soap Dish	**4507051**	14.0	$2,130.00
Swivel Showerhead and Soap Dish	**4507052**	15.0	$2,130.00
Swivel Showerhead, less Soap Dish	**4507053**	14.0	$2,130.00
Professional Hand Shower, Glide Rail, VB and Soap Dish	**4507054**	17.0	$2,571.00
Professional Hand Shower, Glide Rail, VB, less Soap Dish	**4507055**	16.0	$2,571.00
Deluxe Hand Shower, Glide Rail, VB and Soap Dish	**4507056**	18.0	$2,652.00
Deluxe Hand Shower, Glide Rail, VB, less Soap Dish	**4507057**	17.0	$2,652.00
Professional Hand Shower, Glide Rail, VB, Fixed Showerhead and Soap Dish	**4507058**	18.0	$3,705.00
Professional Hand Shower, Glide Rail, VB, Swivel Showerhead and Soap Dish	**4507059**	19.0	$3,705.00

Hydropanel II with e710 Combination Mixing Valves with Metal Handles

Description	Order Code	Weight (lbs.)	List Price
Fixed Showerhead and Soap Dish	**4507100**	15.0	$2,169.00
Fixed Showerhead, less Soap Dish	**4507101**	14.0	$2,169.00
Swivel Showerhead and Soap Dish	**4507102**	15.0	$2,169.00
Swivel Showerhead, less Soap Dish	**4507103**	14.0	$2,169.00
Professional Hand Shower, Glide Rail, VB and Soap Dish	**4507104**	17.0	$2,610.00
Professional Hand Shower, Glide Rail, VB, less Soap Dish	**4507105**	16.0	$2,610.00
Deluxe Hand Shower, Glide Rail, VB and Soap Dish	**4507106**	18.0	$2,690.00
Deluxe Hand Shower, Glide Rail, VB, less Soap Dish	**4507107**	17.0	$2,690.00
Professional Hand Shower, Glide Rail, VB, Fixed Showerhead and Soap Dish	**4507108**	18.0	$3,742.00
Professional Hand Shower, Glide Rail, VB, Swivel Showerhead and Soap Dish	**4507109**	19.0	$3,742.00

Hydropanel II Modular Shower Systems

Hydropanel II Shower Systems are constructed from stainless steel. They feature a pressure balance or thermostatic mixing valve with metal lever handle, vandal-resistant fasteners, color-coded graphics, end caps, and are factory-tested and pre-assembled.

Model 4504002

Model 4504210E

Model 4500416P

Hydropanel II with Biltmore 900 Pressure Balancing Valve	Order Code	Weight (lbs.)	List Price
Hydropanel II with Fixed Showerhead and Soap Dish	**4504000**	15.0	$2,029.00
Hydropanel II with Fixed Showerhead, less Soap Dish	**4504001**	14.0	$2,029.00
Hydropanel II with Swivel Showerhead and Soap Dish	**4504002**	15.0	$2,029.00
Hydropanel II with Swivel Showerhead, less Soap Dish	**4504003**	14.0	$2,029.00
Hydropanel II with Professional Hand Shower, Glide Rail, VB and Soap Dish	**4504004**	17.0	$2,457.00
Hydropanel II with Professional Hand Shower, Glide Rail, VB, less Soap Dish	**4504005**	16.0	$2,457.00
Hydropanel II with Deluxe Hand Shower, Glide Rail, VB and Soap Dish	**4504006**	18.0	Add: $2,571.68
Option: Metering Valve Only	Suffix **M**		Add: $741.75
Metering Valve with Pressure Balancing	Suffix **MP**		$1,088.00

Hydropanel II with HydroGuard PB410 Pressure Balancing Valve			
Hydropanel II with Fixed Showerhead and Soap Dish	**4500416P**	15.0	$2,424.00
Hydropanel II with Fixed Showerhead, less Soap Dish	**4500417P**	14.0	$2,424.00
Hydropanel II with Swivel Showerhead and Soap Dish	**4500418P**	15.0	$2,424.00
Hydropanel II with Swivel Showerhead, less Soap Dish	**4500419P**	14.0	$2,424.00
Hydropanel II with Hand Shower VB and Soap Dish	**4500420P**	17.0	$2,859.00
Hydropanel II with Hand Shower, VB, less Soap Dish	**4500421P**	16.0	$2,859.00
Hydropanel II with Diverter, Deluxe Hand Shower, VB, Fixed Showerhead, and Soap Dish	**4504104P**	17.0	$5,177.00

Hydropanel II with HydroGuard e420 Thermostatic Mixing Valve			
Hydropanel II with Fixed Showerhead and Soap Dish	**4504210E**	15.0	$2,825.00
Hydropanel II with Fixed Showerhead, less Soap Dish	**4504211E**	14.0	$2,825.00
Hydropanel II with Swivel Showerhead and Soap Dish	**4504212E**	15.0	$2,825.00
Hydropanel II with Swivel Showerhead, less Soap Dish	**4504213E**	14.0	$2,825.00
Hydropanel II with Hand Shower VB and Soap Dish	**4504214E**	17.0	$3,265.00
Hydropanel II with Hand Shower, VB, less Soap Dish	**4504215E**	16.0	$3,265.00

ADA compliant

(Prices Effective 01/08/24)

Hydropanel II Dual Shower with Diverter	Order Code	Weight (lbs.)	List Price
Hydropanel II with Diverter, Deluxe Hand Shower, VB, Fixed Showerhead and 900 Series Pressure Equalizing Valve, Soap Dish	**4504103**	22.0	$4,225.00

Hydropanel II Tub/Shower with Biltmore 900 Pressure Balancing Valve			
Hydropanel II with Fixed Showerhead, Diverter Spout and 900 Series Pressure Equalizing Valve with Soap Dish	**4504031**	22.0	$3,269.00

Hydropanel II Modular Shrouding System			
Horizontal Adaptor Kit, 16"	**4504040**	3.8	$388.90
Horizontal Adaptor Kit, 24"	**4504041**	6.9	$367.70
Horizontal Adaptor Kit, 48"	**4504042**	13.0	$527.40
Overlay Shroud Kit, 8"	**4504043**	1.6	$256.90
Overlay Shroud Kit, 13"	**4504044**	2.6	$269.30
Overlay Shroud Kit, 16"	**4504045**	3.7	$290.30
Overlay Shroud Kit, 18"	**4504046**	4.2	$307.80
Overlay Shroud Kit, 23"	**4504047**	6.4	$330.60
Overlay Shroud Kit, 28"	**4504048**	5.5	$351.60
Extension Shroud Kit, 6"	**4504050**	1.6	$251.70
Extension Shroud Kit, 24"	**4504051**	4.2	$330.60
Corner Shroud Kit, 10"	**4504049**	2.2	$267.40
Corner MTG Kit	**4500430**	1.0	NLA
Corner End Cap	**4504015**	0.7	NLA
End Cap Kit	**4504011**	0.1	$70.50

See page 31 for ESP™ Infrared and Piezo Proximity Hydropanel Systems.

HydroGuard® ESP Infrared Showers

Powers ESP Infrared Showers are supplied complete with the sensor assembly, 24 VAC solenoid valve, modular junction box and mounting hardware. Optional box mount or plug-in transformer available. Hand showers and diverters are optional as well.

HydroGuard® Piezo Sensor Showers

Powers ESP Piezo Showers are supplied complete with 24 VAC solenoid valve, installation kit, and control box. Optional box-mount or plug-in transformer available. (Piezo shower is also available for multiple shower applications.)

ADA compliant

447– ☐ 0 0 ☐ ☐ ☐ ☐ ☐ ☐

	List Price	Order Code
Sensor		
Infrared	$2,864.00	1
Piezo		
for wall depth 0–.25"	NLA	3
for wall depth .26"–1.5"	$2,234.00	4
for wall depth 1.6"–4.5"	$2,260.00	5
for wall depth 4.6"–6.5"	$2,349.00	6
for wall depth 6.6"–8.5"	$2,404.00	7
Transformer (Order separately-See below)		
None	N/C	00
Control Box		
Individual Control (For Piezo)	N/C	IC
Less Box (For Infrared)	N/C	00
Showerhead		
None	N/C	00
Adj. Brass/Arm and Flange	$122.20	K1
Adj. Brass/Arm and Flange	$166.30	M1
Institutional (141 381)	NLA	N0
Institutional (141 868)	$510.00	P0
Institutional (141903A)	$435.50	Q0
Institutional (141903B)	$477.90	R0
Institutional (141903C)	$435.50	S0
Hand Shower		
None	N/C	0
Deluxe (141 163) w/VB (141 319)	$813.30	6
Standard (141 827) w/VB (141 319)	$535.50	8
Diverter		
None	N/C	0
Concealed (141600B)	$376.20	Y
Concealed (141600E)	$401.60	A
Concealed (141600F)	$413.40	B
Transformer (Powers up to 1 solenoid)		
Box (444 119)	$225.50	

Hydropanel ESP Infrared Showers

Powers Hydropanel ESP Infrared Showers are supplied complete with the sensor assembly and 24 VAC solenoid valve pre-piped in a stainless steel shroud. Modular junction box and mounting hardware included, as well as optional box mount or plug-in 24 VAC transformer.

Hydropanel ESP Piezo Showers

Powers Hydropanel ESP Piezo Showers are supplied complete with the assembly, proximity sensor assembly, and 24 VAC solenoid valve, pre-piped in a stainless steel shroud. Control box and mounting hardware included.

ADA compliant

450– □ 0 0 □ □ □ □ □ □

	List Price	Order Code
Sensor		
Infrared	$5,216.00	1
Piezo	$4,194.00	2
Transformer (Order separately-See below)		
None	N/C	00
Control Box		
Individual Control (Push Button)	N/C	IC
Less Box (Infrared only)	N/C	00
Showerhead		
Fixed Head	N/C	03
Swivel Head	N/C	04
Professional Hand Shower (141 318) w/VB (141 319)	$549.10	07
Deluxe Hand Shower (141 163) w/VB (141 319)	$813.30	06
Standard Hand Shower (141 827) w/VB (141 319)	$535.50	08
Fixed Head, Standard Hand Shower, VB (141 319) and Diverter (141600B)	$970.60	10
Fixed Head, Deluxe Hand Shower, VB (141 319) and Diverter (141600B)	$1,190.00	12
Soap Dish		
With Soapdish	N/C	WD
Less Soapdish	N/C	LD
Transformer (Powers up to 1 solenoid)		
Box (444 119)	$225.50	

LEAD FREE*

Aqua Sentry® 2 Series LF460 Alarm System

Audibly and visibly warns and shuts down supply if water temperature exceeds high or low set-points.

AquaSentry 2 Alarm System, complete

Includes the AquaSentry 2 control module, temperature sensor with phone-style jack, sensor junction box, 4 x 4 electrical box, UL/CSA approved 24 VAC, class 2 transformer, and 25 feet of station cable.

Model	Order Code	Weight	List Price
LF4600150	**0123789**	8.0 lbs.	$2,922.00

Motorized Ball Valve, cable, and shock absorber must be ordered separately. See below.

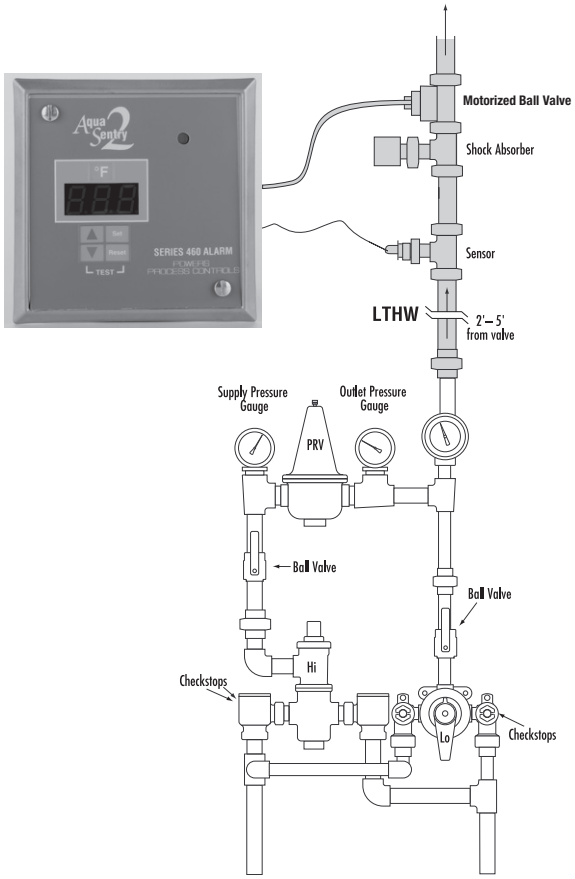

Accessories for AquaSentry 2

Motorized Ball Valves - 24 VAC

	Order Code	Weight	List Price
1/2"	**0123835**	9 lbs.	$2,724.00
3/4"	**0123839**	10 lbs.	$2,779.00
1"	**0123843**	11 lbs.	$2,979.00
1-1/4"	**0123847**	11 lbs.	$3,107.00
1-1/2"	**0123850**	12 lbs.	$3,245.00
2"	**0123853**	14 lbs.	$4,927.00

Cable

Telephone station cable

Order Code	List Price
460 339	$4.67/foot

Shock Absorber

1" NPT, stainless steel, nitrogen-charged.

Order Code	Weight	List Price
460 353	1.0 lbs.	$1,243.00

Components

460 602	AquaSentry 2 Transformer, Class 2, 24 VAC, UL/CSA-approved, 4 lbs.	$318.90
460 601	Temperature Sensor with Phone Jack	$733.10

*The wetted surface of this product contacted by consumable water contains less than 0.25% of lead by weight.

Fotoguard and Fotopanel Series 440

For precise control of water temperature for photographic processing.

Fotoguard

Fotopanel

Fotoguard

Description	Order Code	Capacity	Outlets	Weight	List Price
Concealed—Stainless steel faceplate with temperature indication, volume control, inlet strainer checkstops.	**4401550**	1–6 gpm	1/2"	7.5 lbs.	$2,726.00
Exposed—Chrome-plated finish, inlet strainer checkstops, volume control.	**4401500**	1–6 gpm	1/2"	7.8 lbs.	$3,728.00
	4401510	5–14 gpm	1/2"	9.5 lbs.	$4,160.00
Fotopanel					
Stainless steel cabinet includes T/P valve, temperature adjustment, inlet strainer checkstops, On/Off valve, volume control, dial thermometer, vacuum breaker.	**4401000**	1–6 gpm	1/2"	17.0 lbs.	$6,250.00
	4403000	5–14 gpm	1/2"	21.0 lbs.	$7,838.00
Same as 440-1000 with recessed cabinet.	**4401020**	1–6 gpm	1/2"	17.0 lbs.	$7,564.00
Optional temperature ranges; add appropriate suffix code.	40° to 90°F	Suffix code: **W**			Add: $328.47
	120° to 175°F	Suffix code: **V**			Add: $328.47

High Temperature Shutoff Device	Type	Order Code	Weight (lbs.)	List Price
Shower high temperature shut-off device used between shower arm and shower head 115°F limit. Automatic reset. ASSE 1062 listed	—	**HT115**	0.3	$117.20

Checkstops (sold in pairs)	Type	Order Code	Weight (lbs.)	List Price
Straight, 1/2" IPS, Concealed	A	**141 176**	1.1	$147.70
Straight, 1/2" IPS, Exposed, Polished Chrome	B	**141 177**	1.0	$435.50
Straight, 1/2" Sweat, Concealed	C	**141 187**	1.1	$147.70
Angled, 1/2" Sweat, Concealed	D	**141 326**	1.3	NLA
Angled, with Strainer, 1/2" IPS, Concealed	E	**230 046**	2.5	$398.20
Angled, with Strainer, 1/2" IPS, Exposed, Polished Chrome	F	**230 048**	2.4	$621.80
Straight, 1/2" IPS, Rough Chrome	G	**141 307**	1.1	NLA

Showerheads	Type	Order Code	Weight (lbs.)	List Price
Economizer, Chrome-Plated ABS, Adjustable	J	**141 371**	0.5	$34.20
Standard, Chrome-Plated Brass, Adjustable	K	**141 377**	0.7	$71.40
Large, Chrome-Plated Brass, Adjustable	M	**141 376**	1.1	$115.20
Low Flow (1.6 gpm) Shower Head, Chrome-Plated	G	**141 800**	2.5	$179.70
Low Flow (1.5 gpm) Shower Head, Chrome-Plated	H	**141 801**	0.5	$142.60
Massage Showerhead, Polished Chrome	—	**141 803**	0.9	NLA
Adjustable, Brass Ball Joint Showerhead, Polished Chrome	—	**141 353**	1.5	NLA
Standard, Chrome-Plated Brass, Adjustable, 1/2" Male Thread	—	**141 378**	0.7	$108.70
Large, Chrome-Plated Brass, Adjustable, 1/2" Male Thread	—	**141 379**	1.1	$152.80

141 868 **141 816/141 817** **141903A/B** **141903C/D**

Institutional Showerheads	Type	Order Code	Weight (lbs.)	List Price
30° Fixed Head with Screwed/Sweat Connections	—	**141 381**	3.1	NLA
Wall-Mounted, 25°, Fixed Head with 5° Adjustment Feature, Vandal-Resistant	—	**141 868**	2.0	$510.00
Fixed Showerhead, Adjustable Spray, Chrome-Plated, Brass	—	**141 816**	1.0	$338.80
Fixed Showerhead, Adjustable Spray, Chrome-Plated, Brass, 1.5gpm	—	**141 817**	1.0	$338.80
Small Ball Joint Shower Head with Wall Bracket, Anchor Plate, and Adjustable Spray, Chrome Plated, Brass	—	**141903A**	3.0	$435.50
Large Ball Joint Shower Head with Wall Bracket, Anchor Plate, and Adjustable Spray, Chrome Plated, Brass	—	**141903B**	3.2	$477.90
Fixed Showerhead with Wall Bracket, Anchor Plate, and Adjustable Spray, Chrome-Plated, Brass	—	**141903C**	2.7	$435.50
Fixed Showerhead with Wall Bracket, Anchor Plate, and Adjustable Spray, Chrome-Plated, Brass, 1.5 gpm	—	**141903D**	2.7	$435.50

Arm and Flange Kits	Type	Order Code	Weight (lbs)	List Price
Standard Arm and Flange	1	**141 399**	0.3	$53.00
Deluxe Arm and Flange (with set screw on flange)	2	**141 198**	0.4	$81.60

1,2

5

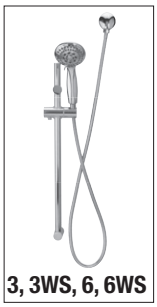
3, 3WS, 6, 6WS

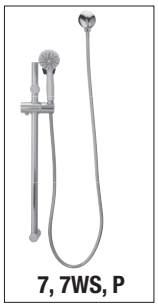
7, 7WS, P

8, 8WS, N, NWS

Hand Shower Systems	Type	Order Code	Model/Part No.	Weight	List Price
24" Stainless Steel ADA Wall Grab Bar with Shower System	1	**141 174**	141 174	4.7	$748.70
36" Stainless Steel ADA Wall Grab Bar with Shower System	2	**141 175**	141 175	5.5	$770.60
Standard, Hand Spray Push Button, CP Plastic, 2.50 gpm, Metal Hose, Wall Mount, 3-Position, 2/Kit	5	**6551722**	141 161N	2.0	$347.60
Standard, Hand Spray Push Button, CP Plastic, 2.50 gpm, Metal Hose, 24" Glide Rail	8	**6551723**	141 827N	2.6	$454.00
Standard, Hand Spray Push Button, CP Plastic, 1.80 gpm WaterSense®, Metal Hose, 24" Glide Rail	8WS	**6551724**	141 827WS	2.6	$454.00
Standard, Hand Spray Push Button, CP Plastic, 2.50 gpm, Metal Hose, 30" Glide Rail	N	**6551725**	141 879N	3.1	$611.60
Standard, Hand Spray Push Button, CP Plastic, 1.80 gpm WaterSense®, Metal Hose, 30" Glide Rail	NWS	**6551726**	141 879WS	3.1	$611.60
Professional, Hand Spray Push Button, White Plastic, 2.50 gpm, Metal Hose, 18" Glide Rail	P	**6551735**	141 837N	2.5	$467.50
Professional, Hand Spray Push Button, White Plastic, 2.50 gpm, Metal Hose, 24" Glide Rail	7	**6551733**	141 318N	2.5	$467.50
Professional, Hand Spray Push Button, White Plastic, 1.80 gpm WaterSense®, Metal Hose, 24" Glide Rail	7WS	**6551734**	141 318WS	2.5	$467.50
Deluxe, Hand Spray 5 Setting, CP Plastic, 2.50 gpm, Metal Hose, 24" Glide Rail	6	**6551727**	141 163N	3.2	$731.80
Deluxe, Hand Spray 5 Setting, CP Plastic, 1.80 gpm WaterSense®, Metal Hose, 24" Glide Rail	6WS	**6551728**	141 163WS	3.2	$731.80
Deluxe, Hand Spray 5 Setting, CP Plastic, 2.50 gpm, Metal Hose, 30" Glide Rail	3	**6551729**	141 919N	3.3	$875.90
Deluxe, Hand Spray 5 Setting, CP Plastic, 1.80 gpm WaterSense®, Metal Hose, 30" Glide Rail	3WS	**6551730**	141 919WS	3.3	$875.90
Low Flow (1.5 gpm), Hand Spray Pause, 4 Setting, CP Plastic, Metal Hose, 24" Glide Rail, WaterSense®	M	**6551732**	141 152FL	3.2	$710.40
Low Flow (1.5 gpm), Hand Spray Pause, 4 Setting, CP Plastic, Metal Hose, 30" Glide Rail, WaterSense®	L	**6551731**	141 150FL	3.3	$804.70
Standard Hand Sprayer, Push Button, CP Plastic, 2.50 gpm	—	**6551736***	141161AN	0.21	$123.20
Standard Hand Sprayer, Push Button, CP Plastic, 1.80 gpm, WaterSense®	—	**6551741***	141161AWS	0.21	$123.20
Professional Hand Sprayer, Push Button, White Plastic, 2.50 gpm	—	**6551746***	141318AN	0.21	$135.00
Professional Hand Sprayer, Push Button, White Plastic, 1.80 gpm, WaterSense®	—	**6551747***	141318AWS	0.21	$135.00
Deluxe Hand Sprayer, 5 Setting, CP Plastic, 2.50 gpm	—	**6551743***	141163AN	0.44	$398.20
Deluxe Hand Sprayer, 5 Setting, CP Plastic, 1.80 gpm, WaterSense®	—	**6551744***	141163AWS	0.44	$398.20
Low Flow Hand Sprayer w/Pause, 4 Setting, CP Plastic, 1.50 gpm, WaterSense®	—	**6551745***	141150AN	0.45	$147.90
18" Glide Rail with Adjustable Cradle	—	**6551748***	141163EN	0.63	$367.00
24" Glide Rail with Adjustable Cradle	—	**6551740***	141163DN	0.67	$394.40
30" Glide Rail with Adjustable Cradle	—	**6551742***	141731N	0.79	$488.70
60" Stainless Steel Hose	—	**6551737***	141161BN	0.56	$205.50
Swivel Connector	—	**141161C***	141161C	0.30	$110.90
Wall Mount, 3-Position w/Screws & Plugs, 2/Kit	—	**6551738***	141161DN	0.04	$77.30
Supply Elbow, CP Plastic Cover, Brass 1/2" NPT	—	**6551739***	141320N	0.42	$106.90
Quick-Release Hose Coupling (Quick Disconnect)	—	**141804A**	141804A	0.40	$176.30

*Parts Discount Applies

Tub Spouts

Diverter, Chrome-Plated Brass, 3/4" IPS	Q	**141 159**	1.2	$171.40
Non-Diverter, Chrome-Plated, 1/2" IPS	R	**141 171**	0.4	$76.50
Diverter, Chrome-Plated, 1/2" IPS	S	**141 349**	0.7	$91.70
Diverter, Chrome-Plated Brass, 1/2" IPS	T	**141 350**	1.3	$157.80
Diverter, Chrome-Plated, 1/2" Slip-fit	U	**141 409**	1.0	$100.20

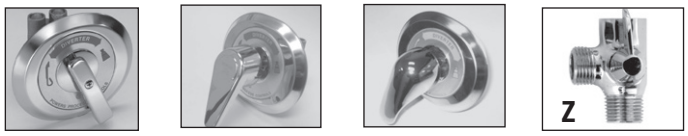

141600B 141600E 141600F

Diverters

Concealed Diverter Valve, 3-Port, 1/2" Sweat, Metal Handle	Y	**141600B**	2.0	$376.20
Concealed Diverter Valve, 3-Port, 1/2" Sweat, Deluxe ABS Handle	A	**141600E**	3.0	$401.60
Concealed Diverter Valve, 3-Port, 1/2" Sweat, Deluxe Metal Handle	B	**141600F**	3.0	$413.40
Exposed Diverter, 3-Port, Shower Arm-Type	Z	**141 700**	0.5	$120.60

043834A

Vacuum Breakers

Wall-Mounted Vacuum Breaker, Chrome-Plated Finish, Elevated	V	**131 258**	2.0	$528.50
In-Line Vacuum Breaker	W	**141 319**	0.4	$81.60
Vacuum Breaker, 1/2" NPT Outlet, Wall Mount, Polished Chrome	—	**131 970**	1.8	NLA
Vacuum Breaker, 1/2" NPT Bottom Inlet, 1/2" NPT Side Outlet, Polished Chrome	—	**043834A**	—	NLA

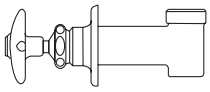

975 170

Volume Control Valves

Concealed, 1/2" IPS	**975 170**	1.0	$611.60
Showerhead Volume Regulator*	**141 305**	0.5	NLA

8943709 8943928 8943897

Dial Thermometers

For mounting with HydroGuard systems:			
Flush-mounted Thermometer with 3-Color Dial, Piping Manifold, and Stainless Escutcheon. 0 to 200°F	**131 251**	2.0	$826.60
Thermometers with Bulb for Liquid Exposure:			
3-Color Dial, 1-1/16" Bulb. Scale is 0 to 200°F (–20 to 90°C)	**8943709**	0.5	$449.10
3-Color Dial, Horizontal Bulb. Scale is 0 to 200°F (–20 to 90°C)	**8943928**	1.0	$467.50
Black Dial, 1-7/8" Bulb. °F Scale. 30 to 130°F	**8943897**	1.0	$449.10
Combination Thermometer, 1/2" T/P Thermometer. 0 to 200 psi, 60 to 320°F	**131 123**	0.5	$327.20

Metering Valve

Metering Valve - Shower	**141 820**	3.6	$1,594.00

*Parts Discount Applies

To determine the price of a complete #11 Regulator, add the price of the desired lower housing (below) to the price of the desired thermal system (page 38)

595 ☐ ☐ ☐ ☐ ☐ ☐ ☐ ☐ ☐ ☐ ☐ ☐ ☐

Lower Housing
Determine the order code from the lower housing assembly code chart (below). Eliminate the 590 prefix when ordering a complete regulator

Thermal system
Determine the order code from the thermal system code chart (page 38). Eliminate the 700 prefix when ordering a complete regulator

#11 Lower Housing Assemblies

590 ☐ ☐ ☐ ☐ ☐ ☐

Valve Type				Order
Seat	**Packing**	**Body**	**Trim**	**Code**
Single Comp	EP (Heating)	Bronze	Bronze	**CD**
Single	TFE (H) EP (C)	Bronze	Stainless	**ST**
Double	EP (H&C)	Bronze	Bronze	**DB**
Double	TFE (H) EP (C)	Bronze	Stainless	**DS**
Mixing	EP (Mixing)	Bronze	Bronze	**WM**

	Style					Order
Size	**CD**	**ST**	**DB**	**DS**	**WM**	**Code**
1/2" A	-	-	-	-	-	A50
1/2" B	-	-	-	-	-	B50
1/2" C	-	-	-	-	-	C50
1/2" D	-	-	-	-	-	D50
1/2"	$2,387.00	$2,596.00	-	-	-	050
3/4"	$2,459.00	$2,712.00	-	-	$2,889.00	075
1"	$3,095.00	$3,387.00	$3,743.00	$4,942.00	$3,127.00	100
1-1/4"	$3,602.00	-	$4,229.00	$5,388.00	$3,644.00	125
1-1/2"	$4,169.00	-	$4,869.00	$6,387.00	$4,209.00	150
2"	-	-	$6,599.00	$8,643.00	$5,604.00	200

Pricing: To determine the list price and availability of the selected lower housing, locate the size and style desired in the chart above. The number corresponding to your selection is your list price. If a list price is not shown for your selection, then your selection is not available in the size and style chosen.

Valve Action	**Order Code**
Heating (not available in WM body style)	H
Cooling (not available in type CD and WM body style)	C
Mixing (WM only)	M

Note: These products are made to order and are not returnable or subject to credit.

700 ☐ ☐ ☐ ☐ ☐ ☐ ☐

Bulb and Capillary Material	Price	Order Code
Copper (with 8" capillary)	$2,579.00	C
Stainless Steel (with 8" capillary)	$4,973.00	*S
Capillary Length		
8'	N/C	08
15' (copper)	$563.70	15
15' (stainless steel)	$884.30	15
30' (copper)	$804.70	30
30' (stainless steel)	$2,328.00	30
Bulb Style		
Fixed Union	N/C	D
No Pipe Fittings	N/C	*J
Adj. Union	$553.70	A
D Vertical	NLA	V
•All other bodies		
Non-Indicating	N/C	N
Indicating	$520.00	I

***Note: Stainless Steel J Bulb Style NLA**

Range/Bulb Size Code (two-digit codes below)
All ranges/bulb sizes listed below are **no charge.** Select range with setpoint in **upper third** for best performance. Consult factory for ranges/bulb sizes not listed.

Temperature Ranges
Single or Double Seat Valves
Sizes 1/2" through 2"

Range/Bulb Size Codes		Heating D.A.	Cooling R.A.	Water Mix 1/2" to 2"
	01	10º to 70ºF	0º to 60ºF	10º to 60ºF
1″x 20″	02	55º to 115ºF	45º to 105ºF	55º to 115ºF
Bulb	03	85º to 145ºF	70º to 130ºF	80º to 140ºF
	04		90º to 150ºF	100º to 160ºF
	05	110º to 170ºF	110º to 150ºF	110º to 160ºF
	06	NLA		
1″x 9″	07	NLA	NLA	NLA
Bulb	08	NLA	NLA	NLA
	09	NLA	NLA	NLA
	10	NLA	NLA	NLA
	11	NLA	NLA	NLA

Temperature Ranges
Double Seat
Valve Sizes 2 -1/2" through 4"

Range/Bulb Size Codes		Heating D.A.	Cooling R.A.	Water Mix
	12	10º to 70ºF	0º to 60ºF	Not applicable
1-1/4″	13	55º to 115ºF	45º to 105ºF	
x 24″	14	85º to 145ºF	70º to 130ºF	
Bulb	44		90º to 150ºF	
	15	110º to 170ºF		
	16	NLA		
1″x 20″	17	NLA	NLA	
Bulb	18	NLA	NLA	
	19	NLA	NLA	
	20	NLA	NLA	
	21	NLA	NLA	

#11 Accessories

Wells

	Chrome-Plated Copper		Stainless Steel	
Bulb Size	Part No.	Price	Part No.	Price
1″ x 9″	**709 193**	**$412.40**	**808 478**	**$1,371.00**
1″ x 20″	**709 075**	**$582.00**	**808 475**	**$1,541.00**

Stem Lubricator

(not recommended for steam packing)

Part No.	Price
590184A	**$195.50**

Note: Thermal systems are made to order (MTO) and are not returnable or subject to credit.

593 □ □ □ □ □ □ □ □ □ □ □ □ □

Valves
High Performance 2-way . . . . . **SS**
Economy 2-way. . . . . **SD**
Mixing. . . . . **WM**
High Capacity
Balanced 2-way. . . . . **DB**
Precision Low Flow . . . . . **VE**

Size . . . . . Order Code
1/2" (VE only) **A50-D50**
1/2" (others)* **050**
3/4" **075**
1". **100**
1 1/4". **125**
1 1/2". **150**
2". **200**

End Connections
Screwed . . . . . **S**

Valve Trim
Stainless (DB, SS, VE). . . . . **S**
Bronze w/Ep (DB, SD, WM). . . . . **B**
Bronze w/ Teflon (WM) . . . . . **T**

Action
Fail Open (Air-to-Close) . . . . . **X**
Fail Closed (Air-to-Open) . . . . . **C**
Mix . . . . . **M**

Packing
Teflon V-Ring. . . . . **S**
EP V-Ring . . . . . **W**

ACCESSORIES SELECT CODE
(refer to next page)

ACTUATOR SELECT CODE
(refer to next page)

*Not available with WM & SD type body.

Note: These products are made to order (MTO) and are not returnable or subject to credit.

Valve Body Prices

SS

Size Code	Body Style/Valve Trim	Price
050	Screwed-NPT, 17-4 SS	$2,260.00
075	Screwed-NPT, 17-4 SS	$2,457.00
100	Screwed-NPT, 17-4 SS	$2,640.00
125	Screwed-NPT, 17-4 SS	$3,544.00
150	Screwed-NPT, 17-4 SS	$3,920.00
200	Screwed-NPT, 17-4 SS	$5,938.00

SD

Size Code	Body Style/Valve Trim	Price
075	Screwed-NPT, Bronze	$1,559.00
100	Screwed-NPT, Bronze	$1,834.00
125	Screwed-NPT, Bronze	$2,229.00
150	Screwed-NPT, Bronze	$2,509.00
200	Screwed-NPT, Bronze	$3,296.00

WM

Size Code	Body Style/Valve Trim	Price
075	Screwed-NPT, Comp. Disc	$2,205.00
075	Screwed-NPT, Teflon	$2,473.00
100	Screwed-NPT, Comp. Disc	$2,473.00
100	Screwed-NPT, Teflon	$3,257.00
125	Screwed-NPT, Comp. Disc	$3,257.00
125	Screwed-NPT, Teflon	$2,316.00
150	Screwed-NPT, Comp. Disc	$2,597.00
150	Screwed-NPT, Teflon	$2,597.00
200	Screwed-NPT, Comp. Disc	$3,420.00
200	Screwed-NPT, Teflon	$3,420.00

DB

Size Code	Body Style/Valve Trim	Price
100	Screwed-NPT, Bronze	$3,974.00
100	Screwed-NPT, 316 SS	$5,577.00
125	Screwed-NPT, Bronze	$5,929.00
125	Screwed-NPT, 316 SS	$8,485.00
150	Screwed-NPT, Bronze	$4,173.00
150	Screwed-NPT, 316 SS	$5,856.00
200	Screwed-NPT, Bronze	$6,226.00
200	Screwed-NPT, 316 SS	$8,910.00

VE

Size Code	Body Style/Valve Trim	Price
A-D50	Screwed-NPT, 300/400 SS	$2,240.00

Actuator Select Code

CODE	PNEUMATIC DIAPHRAGM ACTUATORS	PRICE
46	46 Sq. In. 1"Max Valve Stroke w/Standard Springs adjustable start w/6-12 lb. Fixed Span	$1,633.00
4X	46 Sq. In. 1"Max Valve Stroke w/Extended Springs (Requires Positioner), adjustable start w/22 lb. Span	$2,242.00
4C	46 Sq. In. 1"Max Valve Stroke Extreme Cycle Springs adjustable start w/6-12 lb. Fixed Span	$2,242.00

Accessories Select Code

CODE	DESCRIPTION	PRICE
	Bellofram 1000 I/P'S	
IS	3–15 psi	$3,875.00
TS	1–17 psi	$3,875.00
US	3–27 psi	$3,875.00
	CONTROL/AIR TYPE 900X I/P	
ES	0–30 psi	$4,994.00
	UTILITY POSITIONER AND I/P	
BS	4–20 mA	$6,471.00
	UTILITY POSITIONER	
PS	3-15 psi	$3,314.00
RS	3-9 psi	$3,314.00
SS	9-15 ps	$3,314.00
	NO ACCESSORIES	
OS	No Accessories	N/C

Note: These products are made to order (MTO) and are not returnable or subject to credit.

596 □□ □□□□ □□□□□□□□

Valves
Mixing . . . . . **MI**

Size
2 1/2" **250**
3" **300**
4" **400**
5" **500**
6" **600**

End Connections
125# Flanges . . . . . **F**

Valve Trim
Bronze . . . . . **B**

Action
Mixing . . . . . **M**

Packing
Teflon . . . . . **T**

ACCESSORIES SELECT CODE

ACTUATOR SELECT CODE

Actuator Compatibility

2-1/2", 3", 4"	46" and 100" Diaphragm
5", 6"	100" Diaphragm

Valve Body Prices

MI

Size Code	Body Style/Valve Trim	Price
250	125 lb. Flanges, Bronze	**$5,708.00**
300	125 lb. Flanges, Bronze	**$6,788.00**
400	125 lb. Flanges, Bronze	**$9,727.00**
500	125 lb. Flanges, Bronze	**$14,000.00**
600	125 lb. Flanges, Bronze	**$16,206.00**

Actuator Select Code

CODE	PNEUMATIC DIAPHRAGM ACTUATORS	PRICE
46*	46 Sq. In. 1"Max. Valve Stroke Stainless Steel Springs adjustable start w/6-12 lb. Fixed Span	**$1,633.00**
4X*	46 Sq. In. 1"Max. Valve Stroke w/Extended Stainless Steel Springs (Requires Positioner), adjustable start w/22 lb. Span	**$2,242.00**
1M	100 Sq. In; 5-10 psi Spring Range, (Mixing Valves)	**$5,443.00**

***Not Available with 5" or 6" valve**

Accessories Select Code

CODE	DESCRIPTION	PRICE
	Bellofram 1000 I/P'S	
IS	3–15 psi	**$3,875.00**
TS	1–17 psi	**$3,875.00**
US	3–27 psi	**$3,875.00**
	CONTROL/AIR TYPE 900X I/P	
ES	0–30 psi	**$4,994.00**
	UTILITY POSITIONER AND I/P	
BS	4–20 mA	**$6,202.00**
	UTILITY POSITIONER	
PS	3-15 psi	**$3,314.00**
RS	3-9 psi	**$3,314.00**
SS	9-15 ps	**$3,314.00**
	NO ACCESSORIES	
OS	No Accessories	**N/C**

Note: These products are made to order (MTO) and are not returnable or subject to credit.

597 □ □ □ □ □ □ □ □ □ □ □ □ □

Valves
2-Way . . . . . **SI**

Size
2 1/2" **250**
3" **300**
4" **400**
5" **500**
6" **600**

End Connections
125# Flanges . . . . . **F**

Valve Trim
Bronze . . . . . **B**

Action
Fail Open (Air-to-Close) . . . . . **X**
Fail Closed (Air-to-Open) . . . . . **C**

Packing
Teflon . . . . . **T**

ACCESSORIES SELECT CODE

ACTUATOR SELECT CODE

Valve Body Prices

SI

Size Code	Body Style/Valve Trim	Price
250	125 lb. Flanges, Bronze	**$5,708.00**
300	125 lb. Flanges, Bronze	**$6,788.00**
400	125 lb. Flanges, Bronze	**$9,727.00**
500	125 lb. Flanges, Bronze	**$14,000.00**
600	125 lb. Flanges, Bronze	**$16,206.00**

Actuator Select Code

CODE	PNEUMATIC DIAPHRAGM ACTUATORS	PRICE
4C	46 Sq. In., 1" Max Valve Stroke Extreme Cycle Springs, adjustable start w/6-12 lb. fixed span.	**$1,633.00**
1U (for 6" valve only)	100 Sq. In; 8-13 psi Spring Range, (Normally Closed Valves)	**$5,443.00**
1L (for 6" valve only)	100 Sq. In; 3-8 psi Spring Range, (Normally Open Valves)	**$5,443.00**

Accessories Select Code

CODE	DESCRIPTION	PRICE
	Bellofram 1000 I/P'S	
IS	3–15 psi	**$3,875.00**
TS	1–17 psi	**$3,875.00**
US	3–27 psi	**$3,875.00**
	CONTROL/AIR TYPE 900X I/P	
ES	0–30 psi	**$4,994.00**
	UTILITY POSITIONER AND I/P	
BS	4–20 mA	**$6,471.00**
	UTILITY POSITIONER	
PS	3-15 psi	**$3,314.00**
RS	3-9 psi	**$3,314.00**
SS	9-15 ps	**$3,314.00**
	NO ACCESSORIES	
OS	No Accessories	**N/C**

Note: These products are made to order (MTO) and are not returnable or subject to credit.

(Prices Effective 01/08/24)

Unmounted Valve Accessories

PRODUCT NUMBER	DESCRIPTION	PRICE
	UTILITY GRADE PNEUMATIC POSITIONERS	
1473000D	1/8" - 3/16" Stroke Full Range	**3,695.00**
1473000C	1/4" - 3/8" Stroke Full Range	**3,695.00**
1473000	1/2" - 3/4" Stroke Full Range	**3,695.00**
1473000A	1" - 1 1/2" Stroke Full Range	**3,695.00**
1473000C	1/8" - 3/16" Stroke Split Range	**3,695.00**
1473000	1/4" - 3/8" Stroke Split Range	**3,695.00**
1473000A	1/2" - 1" Stroke Split Range	**3,695.00**
1420373	Positioner Output Pressure Gauge	**127.60**
	POSITIONER MTG. KIT	
147301E	46" Act., Fail Open, 1/4" Stem	**233.30**
147302E	46" Act., Fail Close, 1/4" Stem	**233.30**
147301G	46" Act., 1/2" Stem	**233.30**
147301H	100" Act., 1/2" Stem	**233.30**

PRODUCT NUMBER	DESCRIPTION	PRICE
	UTILITY MTG. KIT I/P & POSITIONER	
593002E	46" Act., Fail Open, 1/4" Stem	**778.80**
593003E	46" Act., Fail Close, 1/4" Stem	**778.80**
593002G	46" Act., 1/2" Stem	**778.80**
593002H	100" Act., 1/2" Stem	**778.80**
	UTILITY I/P MTG. KIT	
512118E	46" Act., Fail Open, (Dir.Act.)	**508.00**
512119E	46" Act., Fail Close (Rev.Act.)	**508.00**
590184A	Stem Lubricator (Type "W" Packing Only)	**195.50**
512118H	100" Act.	**508.00**
	BELLOFRAM 1000 I/P'S	
512 015	3-15 I/P Transducer	**2,569.00**
512 117	1-17 I/P Transducer	**2,569.00**
512 027	3-27 I/P Transducer	**2,569.00**
	CONTROL/AIR TYPE 900X I/P	
100 127	0-30 psi with Mounting Kit, 46" Act.	**4,208.00**
100127H	0-30 psi with Mounting Kit, 100" Act.	**4,329.00**

Accritem® Temperature Controller

Adjustable setpoint, 50° to 350°F.
Complete with pressure gauges and fittings.

Rigid Copper Bulb (1/2″ NPT Pipe Fitting)

Model	Action	Order Code	Weight (in lbs.)	List Price
Air Operated	Direct	**7441213**	3	**2,336.00**
	Reverse	**7441214**	3	**2,336.00**
Water Operated	Direct	**7441217**	4	**3,528.00**
	Reverse	**7441218**	4	**3,528.00**

Rigid Stainless Bulb (1/2″ NPT Pipe Fitting)

Model	Action	Order Code	Weight (in lbs.)	List Price
Air Operated	Direct	**7441270**	4	**3,260.00**
	Reverse	**7441271**	4	**3,260.00**

Accritem® Accessories

Description	Order Code	Weight (in lbs.)	List Price
Accessory Kit for Air or Gas	**744 107**	2	**1,276.00**
Accessory Kit for Water	**744 180**	1	**816.60**
Socket Well—Copper	**744 111**	1	**599.80**
Socket Well—Stainless Steel	**744 082**	1	**1,446.00**
Valve and Seat Repair Kit	**744 168**	1	**179.40**

Accritem® II Temperature Controller

Adjustable setpoint, dual scale: 0° to 300°F and 20° to 150°C.
Complete with pressure gauges and fittings.

Remote Copper Bulb (3/8″ x 4″ bulb, 4 ft. capillary)
Includes 3/8″ NPT Compression Fitting

Model	Action	Order Code	Weight (in lbs.)	List Price
Air Operated	Direct	**7441256**	2	**2,597.00**
	Reverse	**7441258**	2	**2,597.00**

Remote Stainless Bulb (3/8″ x 4″ Bulb, 10 ft. capillary)
Includes 3/8″ NPT Compression Fitting

Model	Action	Order Code	Weight (in lbs.)	List Price
Air Operated	Direct	**7441272**	2	**3,626.00**
	Reverse	**7441273**	2	**3,626.00**

Accritem® II Accessories

Description	Order Code	Weight (in lbs.)	List Price
Accessory Kit for Air or Gas	**744 107**	2.0	**1,276.00**
Socket Well—Copper	**184 119**	0.4	**350.60**
Socket Well—Stainless	**184 118**	0.4	**852.40**

Part No.	Description	List Price
006 379	COPPER TUBING	78.60
030 041	FIL HD BR SCREW	8.90
030 061	SCREW, BRASS 8-32 X 3/16"	9.30
030 066	SCREW, FIL HD BR	9.30
030 068	FIL HD BR SCREW	8.90
030 070	FIL HD BR SCREW	9.30
030 104	SCREW FIL HD BR	9.30
030 106	SCREW	8.90
030 109	FIL HD BR SCREW	8.90
030 126	FIL HD BR SCREW	8.90
030 211	10-32 X 3/8" SCREW	8.90
030 884	SCREW, ADJ. STOP 10-32 X 5/16"	8.90
030 885	SCREW FOR BONNET 10-32 X 1"	8.90
030 887	SCREW 10-24 X 9/16" LENGTH	9.30
030 889	SCREW	8.90
030 890	SCREW 10-24 X 3/4" LENGTH	9.30
030 895	SCREW	9.30
030061G	SCREW, POLISHED CHR 8-32 X 3/16"	8.90
030068G	FIL HD BR SCREW	8.90
030109G	FIL HD BR SCREW	8.90
030126BP	PHILLIPS HEAD BRASS SCREW, QTY= 25	60.00
030542J	SCREW	9.30
030546J	SCREW	9.30
030550J	SCREW, 5/16-18 X 1-1/4"	9.30
030884BP	SCREW, STAINLESS-BULK 50/KIT	81.40
030885BP	SCREW, STAINLESS-BULK 50/KIT	119.40
030887BP	SCREW. QTY= 25	33.60
030887JP	SCREW, QTY= 500	379.50
030889BP	SCREW- BULK 50/KIT	124.40
032 064	SCREW - BRASS	8.90
032 071	FL HD BR SCREW	8.90
032 072	FL HD BR SCREW	9.30
032465A	SCREW, 3/8-24 X 1/2" LG.	20.10
034 234	SCREW	9.30
034 364	SCREW	9.30
034 377	SCREW, SET 10-32 X 3/8" STEEL	9.20
034 407	SCREW	9.30
034 413	SCREW 8-32 X 3/16"	9.30
034 432	SET SCREW	9.30
034047G	SCREW, 6-32 X 5/16"-SERIES 460	9.30
034221G	OVAL PH HD SCREW	9.30
034223G	PHILLIPS HEAD SCREW	9.30
034224G	SCREW 8-32 X 1-1/4" LG	9.30
034413BP	SCREW, 8-32 x 3/16" QTY= 25	53.30
034510G	SCREW	9.30
034512K	SCREW, 8-32 X 1-1/4"	8.90
034515K	SCREW, 8-32 X 1/2" LG.	8.90
035 316	SQ HD SET SCREW	9.30
041 080	HEX BRS NUT	8.90
041 092	HEX BRS NUT	9.30

Part No.	Description	List Price
041 100	NUT, HEX BRS.	9.30
041 119	1/4- 32 X 1/8 X 3/8 HEX NUT	9.30
041 121	NUT 1-1/4 X 20 X 3/16 X 7/16	9.30
041 125	HEX BRS NUT	9.20
041 127	NUT, LOCK 1/4-28 BR.CHR.PLATE	7.75
041 142	HEX BRS NUT	9.20
041 226	NUT 3/8-16 BRASS OR ST. STL.	9.20
041121G	HEX STL NUT	8.90
041167J	SCREW	9.30
041225K	NUT, SHAKEPROOF 5/16-18	9.20
042 672	BRASS NIPPLE 1/2"	26.10
042 786	3/4" X 6" BRASS NIPPLE	85.20
042 900	1-1/4" NPT X 6" LG BRASS NIPPLE	122.70
042672A	NIPPLE	40.30
042672G	NIPPLE, 1-1/8" X 1/2"	34.00
042676G	NIPPLE (420-100)	34.00
043 001	THREAD, PROTECTOR 1/8 I.P.S.	9.30
043 202	BUSHING, PIPE 1/4" X 1/8"	36.80
043 337	PIPE PLUG, 1-1/4" BRASS	130.10
043 339	PIPE PLUG, 1-1/2" BRASS	126.70
043 342	PIPE PLUG, 2" BRASS	255.40
043 351	1/8" FEMALE BRASS PIPE TEE	36.90
043 868	1-1/4" NPT BRASS COUPLING	130.20
043 869	COUPLING 3/4" BRASS	34.00
043009C	THREAD PROTECTOR	9.30
043221G	REDUCING BUSHING	48.10
043331A	TEE PLUG	57.00
043401A	PIPE-TEE 1/2" POLISHED CHROME	93.40
043419A	3/4" THERM TEE ACCORN	163.20
043576G	ELBOW (420-100)	78.60
043810A	ESCUTCHEON PLATE	9.30
043819A	PIPE STRAP, POLISHED CHROME	152.40
043821A	3/4" PIPE STRAP POLISHED CHR.	163.80
043826A	1-1/4" PIPE STRAP POLISHED CHR	174.50
044 045	ELBOW, STREET 90 DEGREE	10.20
044 227	COUPLING 1/2" FEMALE	89.60
046 145	WASHER 463 X 140	9.30
046007K	LOCKWASHER, SHAKEPROOF	9.30
046008K	WASHER, SHAKEPROOF STEEL	9.30
046011J	WASHER, SHAKEPROOF	9.20
046017BP	LOCK WASHER, QTY= 25	38.40
046164K	WASHER	9.30
047 002	O-RING	9.30
047 007	QUAD RING 1/4 X 3/8 X 1/16	8.90
047 008	O-RING 5/16 X 7/16 X 1/16	9.30
047 010	O-RING	9.30
047 013	QUAD-RING 3/8 X 1/2 X 1/16	9.30
047 015	O-RING 11/16 X 7/8 X 3/32	9.30
047 020	RING	9.30
047 022	RING	9.30

Part No.	Description	List Price
047 025	O-RING 1-3/8 X 1-5/8 X 1/8	9.30
047 029	RING	9.30
047 031	RING	9.30
047 033	O-RING 1/2 X 5/8 X 1/16	9.30
047 034	O-RING 5/16 X 7/16 X 1/16	9.30
047 035	O-RING 2 X 2-1/4 X 1/8	9.30
047 036	RING	9.30
047 040	O-RING 3-3/8 X 3-5/8 X 1/8	9.30
047 043	QUAD RING 1/8 X 1/4 X 1/16	9.30
047 045	O-RING 1/4 X 3/8 X 1/16	9.30
047 047	RING	9.30
047 049	RING	8.70
047 108	O-RING	8.70
047 114	O-RING 3/4 X 7/8 X 1/16	9.30
047 120	O-RING 7/8 X 1 X 1/16	9.30
047 125	QUAD RING	9.30
047 126	QUAD RING 3/8 X 1/2 X 1/16	9.30
047 128	O-RING 2-1/8 X 2-1/4 X 1/16	9.30
047 129	O-RING	9.30
047 130	O-RING 2-1/2 X 2-5/8 X 1/16	9.30
047 131	O-RING 1-3/16 X 1-5/16 X 1/16	9.30
047 132	O-RING 1-7/8 X 2 X 1/16	9.30
047002BP	O-RING, QTY= 25	35.70
047013BP	O-RING, QTY= 25	46.00
047015BP	O-RING, QTY= 25	34.90
047020JP	O-RING KIT QTY=. 500	157.50
047022BP	RING QTY= 25	69.00
047029BP	O-RING, QTY= 25	75.40
047029JP	O-RING, JUMBO QTY= 500	459.90
047031BP	O-RING, QTY= 25	26.30
047031JP	O-RING, JUMBO, QTY= 500	213.30
047035BP	O-RING, QTY= 25	78.80
047040BP	O-RING, QTY= 25	145.50
047125BP	O-RING, QTY= 25	120.00
047126BP	QUAD RING-BULK, QTY= 25, KIT	137.00
047126JP	QUAD RING, QTY= 500	1,363.00
047128BP	O-RING- BULK ,QTY= 5, KIT	108.00
047130BP	O-RING, QTY= 25	50.60
080 008	SCREW 8-32 X 2-1/4 BRASS	9.30
080 009	SCREW	9.30
080 010	SCREW 8-32 X 2-3/4	8.90
080 011	SCREW 8-32 X 2"	9.30
080 013	SCREW 8-32 X 1 BRASS FLAT HEAD	9.30
080 014	SCREW 1/4-20 X 1/2 ST. STL.	9.30
080 015	SCREW 5/16-18 X 3/4 ST. STL.	9.30
080 026	SCREW 8-32 X 3-1/2 POL.CHR.PL.	9.30
080 029	SCREW,10-32 FLAT HEAD	9.30
080 032	SCREW 1/4"-20 X 5/8" LG	9.30
080 033	SCREW	9.20
080 034	SCREW 1/4 X 20 X1 STAINLESS	9.20
080 037	SCREW, TRIM PLATE	9.30

Part No.	Description	List Price
080 041	SCREW 8/32, 1-1/4" LONG	9.30
080 042	SCREW 8/32 X 3 1/2 V/PROOF	17.40
080 053	6-32 X 1/4 LG ST STL SCREW	9.30
080 058	10-32 X 5/8 SCREW	8.90
080 064	SCREW, 6 X 1/4" PAN HD,SELF TAP	9.30
080 072	SCREW 10-32 X 2" LG	9.30
080 076	SET SCREW	8.90
080008BP	FLAT HEAD SCREW (25 EACH)	132.60
080010BP	SCREW, 8-32 X 2-3/4, QTY= 25	72.40
080011BP	SCREW, QTY= 25	75.40
080013BP	SCREW, QTY= 25	194.50
080022A	SCREW	9.30
080026BP	SCREW, QTY= 25	157.70
080042A	V/P SCREW, 8 32 X 3/4	9.30
081 003	NUT, TINNERMAN STUD	9.30
081 008	NUT, 5/16 18 X 19/64 X 9/16	9.20
081 010	NUT 10/32 X 3/32 X 5/16	8.90
082 005	WASHER 1" OD	9.30
082005R	WASHER	9.30
084 004	O-RING	9.30
084 007	O-RING 1 3/8 X 1 1/2 X 1/16	9.30
084 008	O-RING 2 X 2 3/16 X 3/32	9.30
084 009	O-RING 2 9/16 X 2 3/4 X 3/32	9.30
084 010	O-RING 3 1/4 X 3 1/2 X 1/8	9.30
084 014	O-RING 5/8 X 3/4 X 1/16	9.30
084 015	O-RING	9.30
084 016	O-RING, SILICONE	9.30
084 020	O-RING	9.30
084 027	O-RING #014	9.30
084 029	O-RING	9.30
084 030	O-RING	9.30
084 031	O-RING	9.30
084 032	O-RING	11.40
084 033	O-RING	9.30
084 041	O-RING	9.30
084 042	O-RING	9.30
084 045	O-RING	8.70
084011JP	O-RING, JUMBO QTY= 500	861.80
084014BP	O-RING, QTY= 25	63.20
084023BP	OVERSIZE O-RING / QTY=.25 PCS	132.60
084025BP	O-RING, QTY= 25	54.80
084032BP	O-RING, QTY= 25	204.70
084033BP	O-RING, QTY= 25	204.70
087 126	SILICONE GEL CHEMPLEX 825	9.30
087126JP	SILICONE GEL, QTY= 500	764.10
084014BP	O-RING, QTY= 25	63.20
088 092	INSERTS, ROUGH IN	29.40
088 093	ROUGH IN, BOTTOM PAD	24.40
088 200	SET SCREW, 10 32 X .25 SS	9.30
089 003	WRENCH 3/32" SERVICE CR STL	9.30
089 004	WRENCH	9.30

Part No.	Description	List Price
0S13738	1/2" STEM EXT & DISC ASSY	1,165.00
0S13739	1/2" TEFLON DISC	386.10
0S19383	1" STEM EXT & DISK HOLDER ASSY	485.70
100 124	C WASHER SPRING TEMPER	9.30
100 140	WASHER .031 TH'K BRASS	9.30
100034A	WASHER BRIGHT NICKEL PLATE	9.30
105 058	HANDLE KIT 4"	35.20
105 059	HANDLE KIT 6"	69.90
105 060	CARTRIDGE KIT	196.60
105 061	BASE PLATE	69.90
105 062	BASE PLATE	92.90
105 064	SUPPLY TUBES	92.90
105 065	AERATOR 2 GPM	12.10
105 068	AERATOR 2 GPM	12.10
115 072	VALVE BODY	326.80
121 061	SPRING, COMPRESSION 10" TOP	284.70
131 257	ESCUTCHEON, POLISHED	487.80
131 275	ILL. LOCK W/KEYS F/CABINETS FRO	255.40
131274A	KEY REPLACEMENT	44.00
132 692	VALVE, 1/2" POLISHED CHROME BALL	188.70
132320A	TRANSFORMER & TIMER ASSY.	3,626.00
132692A	3/4" BALL POLISH	284.70
132692B	1" POLISH CHROME BALL VALVE	329.10
132692C	1-1/4" BALL VALVE	442.90
132692M	BALL VALVE, 1" RB	207.70
141 000	KIT, 1/2" CHECKSTOP	118.30
141000A	KIT, 1/2" CHECKSTOP, PC	128.70
141001BP	SOFT PART & PLUNGER	418.40
141 005	SLIDING PIECE FOR #9 HANDSHOWER	47.70
141 006	SLIDING PIECE FOR #1 and #2 HANDSHOWER	92.30
141 305	FLOW CONTROL, ADJUSTABLE	48.80
141 313	FLANGE FOR 141 198 POL. CHROME	32.00
141 320	ELBOW W/FLANGE	100.20
141 333	PACKING NUT KIT 1/2" NPT	108.40
141 495	WASHER FOR HANDSHOWER	9.30
141 620	HANDLE KIT, INLINE DIVERTER	39.40
141 621	STEM KIT INLINE DIVERTER	71.40
141 622	TRIM KIT, INLINE DIVERTER	115.50
141 651	CHECKSTOP ASSEMBLY	14.30
141 741	HANDLE REPAIR KIT, IN LINE DIV	292.20
141 808	END CAP & PIN (SINGLE)	49.90
141 809	SHOWER MTD W/SPRING (141 163)	74.30
141 831	TIMER, SSAC INC SINGLE SHOT	1,048.00
141 832	ILLINOIS LOCK W/2 KEY	281.40
141 833	PUSHBUTTON SWITCH W/SCREW CON	192.70
141 839	CARTRIDGE ASSY METERING VALVE	693.90
141 843	RING, THERMOMETER	20.70
141 907	STAND OFF	9.30
141166A	HOSE ASSY 18' W/SHAMPOO HEAD	1,120.00

Part No.	Description	List Price
141326B	1/2" ANGLE CHECK (S.J.)	126.70
141381E	SCREW	24.10
141381F	SCREW (PKG OF 12)	47.50
141381G	WHITE INSERT	9.30
141382A	SHOWERHEAD KIT	210.80
141600A	TRIM KIT INLINE DIVERTER	159.30
141612B	INSERT, GRAPHIC	51.00
141741A	COLLAR REPAIR KIT DIVERTER VLV	159.30
141741C	PACKING REPAIR KIT DIVERT VLV.	29.00
141831A	TIMER SOCKET	111.30
141901N	SHOWERHEAD KIT	336.50
1420229	GAUGE, RECEIVER 1 1/2	225.80
1420373	POS. OUTPUT PRESSURE GAUGE	127.60
1420431	PRESSURE GAUGE	89.60
145 449	PLUG BUTTON ACRYLIC KNOB	9.30
145251A	PLUG BUTTON KITCHEN	12.40
147 115	SPRING KIT (UP TO 3/4" TRAVEL)	100.20
147 122	TAKE OFF PLATE ST. STL. 46"	22.30
147 290	SPRING, 438 O.D. 1.34 LG	36.90
147 291	FEEDBACK SPRING (1" STROKE)	9.30
147 330	MOUNTING KIT	234.10
147330C	MOUNTING KIT	168.00
200 046	PIPE PLUG, 1/2" BRASS	22.20
200046G	PLUG 1/2" BRASS CHROME PLATE	31.00
220 050	METAL HANDLE KIT	84.90
220 051	METAL TRIM PLATE	135.10
220 052	ABS HANDLE KIT	74.50
220 053	ABS TRIM KIT	118.40
220 054	SLEEVE KIT	60.30
220 060	CARTRIDGE KIT	165.50
220 451	METAL UPGRADE KIT	333.20
220 452	ABS UPGRADE KIT	299.30
220 453	FLAT METAL UPGRADE KIT	384.80
225 047	GASKET	9.30
225 073	SPRING, VALVE	9.30
225 075	DISC, VALVE	9.30
225 253	LIMIT SCREW	9.30
225 349	KEY	9.30
225 350	H. CY. WRENCH KIT	378.20
225 357	GASKET & PACKING KIT	51.80
225 377	VALVE ASSEMBLY 5 GAL	305.40
225 378	10 GALLON VALVE ASSEMBLY	248.10
225 379	VALVE ASSEMBLY KIT 15 GAL	155.90
225 380	OVERLOAD SPRING ASSEMBLY	66.10
225 386	PISTON CYLINDER	115.50
225 387	PISTON CYLINDER	115.50
225 388	PISTON CYLINDER	115.50
225 389	RETURN SPRING	9.30
225 392	H CYLINDER & VALVE RPLCMT KIT	345.70

Part No.	Description	List Price
225 393	H CYLINDER & VALVE RPLCMNT M3	322.70
225 398	MIXER PISTON 5 & 10 GAL	38.10
225 399	MIXER PISTON	49.90
225 404	HUVA CUP MODEL 8	9.30
225 432	DISC HOLDER	20.10
225 433	DISK HOLDER	24.50
225 444	BODY 1/2" ROUGH BRZ	518.10
225 445	BODY, BRIGHT CHROME 1/2"	559.20
225 450	PACKING GLAND 427/428	74.10
225050BP	PACKING RING, QTY= 25	401.50
225075BP	VALVE DISC, QTY= 25	261.40
225078BP	RETAINER RING, QTY= 25	53.30
225152G	MIXER HANDLE	93.40
225238G	ADJUSTMENT STEM	130.20
225257A	SCREW, RETAINING HANDLE	9.80
225261A	MIXER CVR	126.70
225282A	COVER, MIXER FOR 4401510	96.50
225294A	LOCK RING	60.80
225404BP	HUVA CUP, QTY= 25	178.40
225404JP	HUVA CUP, QTY= 250	1,502.00
225419N	BONNET, MIXER	174.70
227 063	HOT WATER DISC	9.30
227 109	RETURN SPRING	9.30
227 164	PLUG BUTTON	10.20
227 166	RETAINER (DIAL INSERT)	33.60
227 188	PACKING GLAND	22.20
227 196	SLEEVE	29.40
227 197	WASHER	9.30
227 206	SHUT OFF DISC	9.30
227 214	STEM EXT KIT	111.90
227 233	SPACER RING	9.30
227 234	ADJUSTMENT STEM MODEL 4 5 6	115.50
227 280	GASKET	9.30
227 291	HOT WTR SEAT ASY	55.90
227 354	CONTROL KNOB	33.00
227 388	COMBINATION SEAT ASSEMBLY	24.00
227 389	HOT WTR SEAT ASSY	115.10
227166BP	RETAINER RING, QTY= 15	430.30
227166JP	RETAINER RING, QTY= 50	1,215.00
227189BP	TEMPERATURE STOP, QTY= 25	348.40
227190BP	SPACER, QTY= 25	62.40
227191S	HANDLE SATIN	400.20
227192JP	RETAINER RING, QTY= 500	1,817.00
227233JP	RETAINER RING, QTY= 250	1,223.00
227280BP	GASKET 25 PCS TO KIT	34.10
227291BP	HOT WATER SEAT ASSEM. QTY= 15	698.10
227354A	CONTROL KNOB PLASTIC	49.90
227354JP	CONTROL KNOB, QTY= 50	942.00
230 042	CHECK STOP L.H.	329.90

Part No.	Description	List Price
230 045	CHECKSTOP	329.90
230 065	GASKET 1 9/16 X 1/32 THK	9.30
230 079	STEM	36.00
230 081	STEM	39.30
230 083	GASKET	9.30
230 084	SCREEN	9.30
230 094	UNION TAIL PIECE	144.70
230 103	POPPET SPRING	9.30
230 104	SCREEN	26.80
230 116	SCREEN	20.20
230 117	UNION NUT	57.60
230 119	UNION TAIL PIECE	57.60
230 123	POPPET SPRING	9.30
230 127	POPPET SPRING	9.30
230 129	1/2" TRIPLE DUTY P	74.50
230 130	1/2" TRIPLE DUTY S	201.00
230 131	1/2" TRIPLE DUTY G	51.80
230 132	TRIPLE DUTY POPPET K	111.90
230 134	3/4" TRI DUTY SCREEN	111.90
230 135	3/4" TRIP DUTY POP	111.90
230 136	1-1/4" TRI DUTY SCRN	167.90
230 137	1-1/4" TRI DUTY POPPET	167.90
230 146	CHECKSTOP ASSY RH	522.30
230 147	VOLUME STEM	45.80
230 186	POPPET	31.00
230 193	RT HND CHECK BODY ROUGH BRONZE	119.00
230 223	VOLUME STEM EXTENSION	64.60
230 261	CHECK STOP ASSEMBLY	273.00
230 262	CHECK STOP ASSEMBLY	256.00
230 268	BONNET POLISH CHROME	93.30
230 269	3/4" STEM PLAIN	72.40
230 270	3/4" STEM POLISH CHROME	82.10
230 271	3/4" POPPET ASSEMBLY	29.80
230 281	CHECK STOP ASSEMBLY	295.90
230 287	BONNET	89.30
230 288	BONNET POLISH CHROME	126.70
230 289	STEM ASSEMBLY	123.10
230 293	1-1/4" POPPET ASSEMBLY	58.20
230 325	1/2" T.D.CHECK STOP ASSY	370.70
230011G	STRAINER CAP ASSEMBLY	108.40
230067BP	GASKET, QTY= 25	234.20
230076A	BONNET	53.60
230078A	BONNET	69.10
230083BP	GASKET, QTY= 25	25.80
230101BP	GASKET, QTY= 25	75.40
230103BP	SPRING, QTY= 25	137.00
230104BP	SCREEN, QTY= 15	389.90
230261M	3/4" ROUGH BRONZE CHECK STOP	514.90
230262G	CHECK STOP	581.70

Part No.	Description	List Price
230271JP	POPPET ASSEMBLY, QTY= 50	1,085.00
230281M	1-1/4" ROUGH BRONZE CK STOPS	877.30
230282G	BRT CHROME CHECK STOP	977.30
230282M	1-1/4" POLYCHROME CHECK STOPS	1,104.00
230293BP	POPPET ASSY, QTY= 15	729.60
331 266	TUBE, PLASTIC	17.70
331 268	PLASTIC TUBE	17.70
331077A	DIAPHRAGM	270.10
390 001	MOTOR HOUSING	36.00
390 006	431 FUNNEL	33.30
390 010	ADAPTER, MOTOR	38.20
390 012	KNOB	53.60
390 016	431 MOTOR REPLACEMENT KIT	648.50
390 017	432 MOTOR REPLACEMENT KIT	648.50
390 018	431 CROSS HANDLE KIT	237.80
390 024	ADAPTER, MOTOR	71.20
390 026	ADJUSTMENT LOCKING SCREW	8.70
390 036	432 ACTUATOR REPLACEMENT KIT	566.50
390 037	431 ACTUATOR REPLACEMENT KIT	566.50
390 039	434 ACTUATOR REPLACEMENT	851.40
390 048	COMPRESSION SPRING,HELICAL	9.80
390 051	GASKET, MOTOR HOUSING	9.30
390 056	BUSHING 1" X 1/2" HEX	23.70
390 065	433 ACTUATOR REPLACEMENT KIT	707.20
390 066	434 ACTUATOR REPLACEMENT KIT	837.20
390 067	431 POPPET REPLACEMENT KIT	474.20
390 068	432 POPPET REPLACEMENT KIT	528.70
390 069	433 POPPET REPLACEMENT KIT	888.20
390 070	434 POPPET REPLACEMENT KIT	931.20
390 072	434 MOTOR HOUSING	570.30
390 095	GASKET	13.40
390 144	MOTOR HOUSING CAP	174.10
390 145	MOTOR HOUSING CAP	193.60
390 151	432 OVERLOAD ASSEM BY	62.80
390 155	RETURN SPRING	9.30
390 156	CAP, MOTOR HOUSING/PLAIN	522.30
390 157	MOTOR HOUSING CAP	641.70
390 162	RETURN SPRING	11.50
390 169	KNOB, ADJUSTMENT,CHROME PLATE	155.40
390 175	MOTOR HOUSING	446.90
390 178	MOTOR HOUSING CAP	367.70
390 179	MOTOR HOUSING CAP	459.10
390 198	GASKET, MOTOR HOUSING	9.30
390 201	MOTOR FAILURE SPRING	9.30
390 225	MOTOR HOUSING CAP	163.30
390 226	MOTOR HOUSING CAP	167.90
390 239	OVERLOAD SPRING ASSEMBLY	56.70
390 243	GASKET, MOTOR HOUSING	9.30
390 248	SPRING, MOTOR FAILURE N 125	9.30
390 254	ADJUSTMENT KNOB RETAINER	29.40

Part No.	Description	List Price
390 255	ADJUSTMENT KNOB RETAINER	44.60
390 256	ADJUSTMENT KNOB RETAINER	40.60
390 257	ADJUSTMENT KNOB RETAINER	72.40
390 258	ADJ KNOB RETAINER	64.90
390 259	ADJ KNOB RETAINER, CHROME PLATE	104.20
390 286	N45 HYDRO GASKET KIT	97.20
390 287	N45 HYDRO CHECK VALVE	1,085.00
390 294	431 HYDRO GASKET REP	111.90
390 298	432 HYDRO GASKET REP	111.90
390 302	433 HYDRO GASKET REP	167.90
390 305	433 POPPET KIT, PRIOR KIT '91	973.20
390 306	434 HYDRO GASKET REP	178.40
390 311	CROSS HANDLE AND ADJ KNOB KIT	378.20
390 313	HANDLE, CROSS FOR SERIES 431	244.40
390 334	BODY CAP	63.70
390 335	BODY CAP CHROME PLATED	108.40
390 336	BODY CAP	65.90
390 337	BODY CAP, CHROME PLATED	400.20
390 340	ADJUSTMENT KNOB ASSEMBLY	58.20
390 342	ADJUSTMENT KNOB, ROUGH BEZ	93.40
390 466	432 POPPET KIT, PRIOR FEB '91	529.80
390 468	434 POPPET KIT, PRIOR FEB '91	888.20
390 491	POPPET	143.50
390491JP	POPPET, QTY= 10	1,153.00
390 500	432 HI/LO MOTOR REPL. KIT	522.30
390 504	MOTOR ADAPTER	71.40
390 505	MOTOR ADAPTER	36.00
390 507	WAX MOTOR	100.60
390 511	433 VALVE UPGRADE KIT	973.20
390 512	434 VALVE UPGRADE KIT	1,056.00
390 543	1434 MOTOR REPLACEMENT KIT	796.60
390 546	ADJUSTMENT SCREW	12.00
390 571	WRENCH	36.40
390 579	ACTUATOR REPLACEMENT KIT	119.40
390 580	CARTRIDGE REPLACEMENT KIT	274.30
390 581	GASKET'S O-RING KIT	25.90
390 582	CARTRIDGE ES150	280.20
390 619	ACTUATOR	127.60
390 620	SPRING	8.90
390 671	ACTUATOR	248.10
390 777	TEMPERATURE ADJUSTMENT SCREW	9.30
390 795	ADJUSTMENT LOCKING SCREW	9.30
390 800	CHECKSTOP REBUILD KIT	124.70
390 801	CHECKSTOP REBUILD KIT	144.60
390 802	PLUNGER KIT	33.40
390 803	PLUNGER KIT	37.10
390 804	SET SCREW	16.40
390 805	O-RING	9.40
390 806	O-RING	9.40
390 807	ACTUATOR	141.10

Part No.	Description	List Price
390 808	ACTUATOR	141.10
390 809	ACTUATOR	246.80
390 810	ACTUATOR	226.00
390 811	CHECKSTOP REBUILD KIT	124.70
390 812	PLUNGER KIT	88.60
390 813	O-RING	9.40
390 814	ACTUATOR	657.50
390 815	ACTUATOR	708.00
390 816	PLUNGER KIT	91.70
390 826	FUNNEL KIT	230.10
390 827	FUNNEL KIT	258.90
390 828	FUNNEL KIT	298.70
390 829	FUNNEL KIT	305.50
390 830	FUNNEL KIT	338.10
390 831	FUNNEL KIT	453.30
390035BP	POPPET KIT (10)	1,029.00
390035JP	POPPET, QTY= 15	1,310.00
390046BP	POPPET, QTY= 25	241.40
390047JP	COPPER GASKET, QTY= 100	940.40
390051BP	GASKET MOTOR HOUSING, QTY= 25	136.40
390146JP	POPPET, QTY= 15	1,420.00
390155BP	SPRING, QTY= 25	160.30
390166A	SCREW, ADJ	16.60
390169G	KNOB, ADJUSTMENT BRIGHT CHROME	123.10
390228BP	POPPET, QTY= 10	902.70
390228JP	POPPET, QTY= 15	1,153.00
390230JP	POPPET, QTY= 25	1,537.00
390247BP	POPPET STEM. QTY= 25	348.40
390248BP	SPRING, QTY= 25	82.10
390257G	ADJ. KNOB RETAINER BRIGHT CHROME	50.40
390259G	ADJ. KNOB RETAINER BRIGHT CHROME	89.30
390343A	ADJUSTMENT SCREW	9.30
390485BP	POPPET	333.90
390485JP	POPPET, QTY= 5	1,414.00
390493BP	POPPET, QTY= 5	811.30
390493JP	POPPET, QTY= 10	1,380.00
400 023	SHUT OFF DISC	9.30
400 062	DIAL ASSEM REPL KIT SERIES 400	474.20
400 065	HARDWARE PACKAGE	8.90
400 066	HARDWARE PACKAGE	28.90
400 068	HARDWARE PACKAGE	21.60
400 070	HARDWARE PACKAGE	28.90
400 078	HARDWARE PKG KIT	89.30
400 085	CONVERSION KIT FOR 406 DIVERTER	104.20
400023BP	SHUTOFF DISC BULK, QTY= 25	75.40
400023JP	SHUTOFF DISC, QTY= 500	940.40
400062BP	DIAL ASSEMBLY REPLACEMENT	19,555.00
401 086	PLASTIC HANDLE	69.30

Part No.	Description	List Price
401 087	ESCUTCHEON, PLASTIC	60.00
401 088	STEM GUIDE	24.40
401 090	PLUG BUTTON	16.00
401 091	COLOR INDICATOR RING	28.40
401 093	INDICATOR LABEL	9.30
401 100	DIAL ASSEM W/O DIVERTER	234.10
401 146	THROTTLING STEM MOLDED	9.30
401 161	RUBBER GASKET	9.30
401 162	BONNET MOLDED R/B 401162BP	46.10
401 165	MAX. TEMPERATURE STOP	9.30
401 175	BAL CHAMBER REPL KIT 400 & 410	196.60
401 176	STEM REPL KIT 400 HYDROGUARD MD4	56.70
401 177	SELECTOR DIAL	78.80
401 178	ROUGHING IN GUIDE FOR MD4	9.70
401 202	BAL. CHAMBER EXTRACTOR KIT	51.80
401 210	STRAINER CAP	9.30
401 218	MAX. TEMPERATURE STOP	9.30
401 229	ADHESIVE GASKET	9.30
401 230	DIAL ASSEMBLY	144.40
401 231	SELECTOR DIAL	54.60
401 253	SLEEVE	29.40
401 256	RUBBER GROMMET	22.20
401 267	SLEEVE	16.30
401 278	STOP, ADJUSTABLE	9.30
401090A	PLUG BUTTON	9.30
401090K	PLUG BUTTON KIT	62.40
401092BP	NAME PLATE, QTY= 25	278.20
401092JP	NAME PLATE, QTY= 100	719.20
401100BP	DIAL ASSEMBLY, QTY= 5	991.00
401161BP	RUBBER GASKET BULK 25/KIT	77.20
401162BP	BONNET, QTY= 15	583.30
401218BP	MAX TEMP STOP BULK 25/KIT	164.10
401225BP	RETAINER, QTY= 25	204.70
401230A	DIAL ASSEM KIT 400 HYD MD4	299.80
401230B	401 COMPLETE DIAL ASSEMBLY	360.30
401230JP	DIAL ASSEMBLY, QTY= 10	1,223.00
401267JP	SLEEVE QTY=100	1,047.00
401278BP	STOP KIT, ADJUSTING (QTY=. 25)	171.20
403 005	NUT ADJUSTMENT SCREW	9.30
403 007	PIPE PLUG BRASS	9.30
403005G	ADJUSTING SCREW NUT	8.90
410 111	VALVE BODY ASSEMBLY, PE	622.00
410 138	SHUT OFF DISC SPG	9.30
410 145	WASHER, WAVY	9.30
410 146	GASKET	16.20
410 147	LIMIT STOP	9.30
410 157	VOLUME VALVE	9.30
410 166	SPEED NUT	9.30

Part No.	Description	List Price
410 167	SLEEVE, LEVER SCREW	26.80
410 182	SER 410 HYDRO GASKET REPL KIT	46.80
410 183	410 BAL CHAMBER REPL	189.50
410 191	HANDLE	145.00
410 195	PLUG BUTTON	11.50
410 203	COUPLING	12.00
410 233	STEM EXTENSION KIT	50.60
410 243	VALVE BODY MACHINED	234.10
410 248	BAL CHAMBR KIT 440 FOTOPL	211.80
410 284	GASKET	9.30
410 330	CHAMBER ASSEMBLY	57.60
410 339	RETAINER (FOR DIE, CAST DIAL)	20.10
410 346	BONNET	61.50
410 351	ROUGH IN GUIDE	74.30
410 352	BONNET	193.60
410 359	HANDLE	64.60
410 365	LEVER HANDLE SCREW KIT (10)	31.00
410 366	O RING KIT, 047 020 QTY=.25	23.90
410 367	RETAINER KIT (10)	85.90
410 368	WASHER KIT (15 PER KIT)	40.90
410 369	WAVY WASHER KIT (10 PER KIT)	31.00
410 370	GASKET KIT (10)	39.60
410 371	SPLINED STOP 400 KIT (6)	46.80
410 372	VOLUME VLV KIT 410 (2)	38.50
410 374	DIAL INSERT STD	36.60
410 375	THROTTLING STEM ASSEMBLY	49.90
410 377	SUPPORT RING	25.60
410 378	STEM REPLACEMENT KIT	78.80
410 383	LUCITE HANDLE KIT	78.80
410 384	LEVER HANDLE KIT	111.90
410 389	DIAL ASSEMBLY KIT	252.40
410 393	PLASTIC BONNET (410 111)	41.20
410 396	BONNET KIT	123.10
410 398	LIMIT STOP	16.40
410 404	DIAL ASSEMBLY, DELUXE	241.40
410 413	DIAL 410	74.10
410 414	DIAL	89.60
410 415	LEVER ASSEMBLY, PLATED	65.40
410 417	RETAINER	15.80
410 427	SPRING GUIDE FLOW RESTRICTOR	9.30
410 430	DIAL INSERT	22.20
410 437	REDUCER 1/2" X 3/8" WPT BRASS	18.40
410 440	BALANCE CHAMBER ASSEMBLY	126.70
410 442	410 GRAPHIC INSERT ASSEMBLY	38.40
410 445	STANDARD 410 DIAL ASSEMBLY GRAY	160.30
410 446	DELUXE 410 DIAL SSY, GREY	278.20
410 447	410 KNOB ASSEMBLY, ACRYLIC	79.00
410 448	410 LEVER ASSEMBLY	79.00

Part No.	Description	List Price
410 452	VALVE BODY ASSEM HYDROPANEL	655.10
410 460	PLUG DIVERTER	69.60
410 473	410 TRIM UPGRADE W/473	512.90
410 520	410 BODY ASSEMBLY	696.00
410 522	3 PORT BODY ASSEMBLY	741.00
410 565	TRI HANDLE KIT	152.80
410 570	SEAL KIT, OVER SIZE 410 INLET	38.50
410138BP	SHUTOFF DISC SPRING BULK, QTY=25	124.40
410144JP	WASHER, QTY= 500	133.50
410145JP	WASHER, QTY= 500	593.50
410146BP	GASKET, QTY= 10	146.80
410146JP	GASKET, QTY= 500	6,925.00
410284BP	GASKETS 410 BULK PK, QTY= 25	68.40
410374BP	DIAL INSERT, QTY= 15	454.00
410374JP	DIAL INSERT, QTY=50	1,286.00
410375BP	STEM ASSY, QTY=15	708.30
410375JP	STEM ASSEMBLY, QTY= 25	1,124.00
410378A	STEM REPLACEMENT KIT	137.10
410393JP	BONNET, QTY= 50	1,737.00
410413JP	DIAL PLATE, QTY= 25	1,565.00
410427BP	FLOW RESTRICTOR 410, QTY= 25	123.10
410442BP	GRAPHIC INSERT QTY= 15	475.90
410448BP	410 LEVER HANDLE KIT, QTY= 10	769.40
410448JP	LEVER HANDLE KIT, QTY= 15	1,030.00
420 034	VALVE ASSEMBLY	568.30
420 102	WASHER KIT	48.60
420 104	EYE BOLT	24.10
420 105	MOUNTING BODY, 420 KNEE OPERA	339.80
420 114	VALVE	256.40
420 115	PUSH ROD	93.40
420 122	ADJUSTMENT STEM	126.70
420 124	TEMP STOP	8.70
420 128	VALVE ASSEMBLY	833.20
420 130	GASKET	9.30
420 139	STEM ASSEMBLY	119.40
420 143	VALVE ASSEMBLY	587.90
420 145	INSTALLATION TOOL	8.90
420 157	ADJUSTMENT STEM ASSEMBLY	74.50
420 159	FULL UPGRADE KIT	781.00
420 166	DIAL POLISHED FINISH	78.60
420 182	DIAL ASSEMBLY KIT	252.40
420 202	ROUGHING IN GUIDE	9.30
420 208	BONNET ASSEMBLY	109.80
420 212	MAX. TEMP. STOP KIT (5)	51.80
420 213	LUCITE HANDLE INSERT KIT (2)	51.80
420 214	BONNET SCREW KIT (12)	44.60
420 215	HANDLE SCREW (4)	26.50
420 216	DIAL RETAINING SCREW KIT (20)	53.60

Part No.	Description	List Price
420 217	MTG SCREW KIT 20 PCS 080 013	113.20
420 218	LEVER HANDLE SCREW KIT (10)	36.80
420 222	MAX. TEMP. KIT (420) 4 PER KIT	48.30
420 225	PLUG BUTTON KIT (4 PIECES)	61.90
420 230	HANDLE ASSEMBLY R/B 420 243	123.10
420 232	SLEEVE KIT	29.00
420 237	RAINBOW INSERT FOR 420	36.40
420 238	DIAL INSERT/CELSIUS, SERIES 420	41.10
420 239	MOUNTING KIT	154.50
420 242	427 TRI HANDLE KIT	156.40
420 243	420 LEVER HANDLE KIT	126.70
420 267	VANDAL PROOF HARDWARE 420 410	17.70
420 272	TRIM PACKAGE W/ST STL DIAL	137.10
420 300	KNOB ACRYLIC	36.40
420 308	GRAPHIC INSERT ASSEM, 420	39.80
420 314	PLUG BUTTON W/INSERTS	20.50
420 328	NAME PLATE TRIM	36.90
420 330	NAME PLATE & BASE PLATE ASSEMBLY	82.10
420 335	420 DIAL ASSEMBLY, GREY INSERT	160.30
420 336	420 LEVER ASSEMBLY	160.30
420 337	KNOB KIT 420, MODEL 8	160.30
420 356	420 LEVER ASSEMBLY	185.90
420 357	KIT, FULL UPGRADE MODELS 1-10 LCM	769.20
420 442	UPGRADE KIT W/BONNET & RUBBER SEAT	564.40
420 443	UPGRADE KIT W/BONNET, RUBBER SEAT, SCREEN	596.70
420 445	KIT, CARTRIDGE, W/RUBBER SEAT & SCREEN	157.10
e420449	440 FOTOGUARD BODY ASSY	777.40
e420450	440 BODY ASY BR CHR MD7	1,148.00
420 451	KIT, FULL UPGRADE STD. MODELS 1-10	529.80
420 452	CARTRIDGE MODEL 1-10	91.20
420 453	WAX MOTOR KIT,STD. MODELS 1 10	118.80
420 454	BONNET KIT, MODELS 1 10	378.20
420 456	SEAL KIT, MODELS 1 10	21.90
420 481	PLASTIC KNOB KIT	111.90
420 485	420 DIAL KIT POLISHED BRASS	511.60
420 495	410 LEVER HANDLE KIT	89.30
420 508	RING, PACK STOP BRASS MODEL 8	9.30
420 517	SEAT HW STD/HI CAP & L HWT	9.30
420 521	COMBINATION SEAT KIT 7 GALLON	51.80
420 524	O-RING KIT UNDER COUNTER MIXER	17.70
420 534	VALVE ASSEMBLY	442.20
420 552	VALVE ASSEMBLY STD LO CAP	52.50
420 553	VLV ASSEMBLY LOW HW TEMP HI CAP	47.75
420 578	PACKING GLAND	19.60
420 610	420 UTC BONNET REPLACEMENT KIT	452.50
420 611	420 UTC UPGRADE KIT, STD. TEMP.	529.80
420 616	UPGRADE KIT, STD. TEMP.	343.30
420124JP	TEMPERATURE STOP QTY=100	865.10

Part No.	Description	List Price
420125BP	KNOB INSERT, QTY= 25	401.50
420125JP	KNOB INSERT QTY= 100	1,047.00
420166BP	DIAL PLATE, QTY= 15	976.90
420166JP	DIAL PLATE QTY= 25	1,124.00
420190JP	KNOB & SLEEVE QTY= 25	902.70
420230A	419 LEVER HANDLE	104.20
420231BP	LEVER HANDLE QTY= 15	628.40
420231JP	LEVER HANDLE, QTY= 50	1,545.00
420232JP	SLEEVE, QTY= 50	1,119.00
420237BP	DIAL INSERT, QTY= 15	461.10
420237JP	DIAL INSERT QTY= 50	1,310.00
420265BP	STOP RING QTY= 25	130.40
420301E	HANDLE, LEVER CHROME PLATED	74.30
420308BP	GRAPHIC INSERT QTY= 15	481.70
420451C	KIT, HIGH CAPACITY CONVERSION, MOD. 1-10	529.80
420451H	KIT, FULL UPGRADE, HIGH TEMP. MOD. 1-10	529.80
420451L	KIT, FULL UPGRADE, LOW TEMP. MOD. 1-10	529.80
420452C	CARTRIDGE ASSEMBLY TYPE “H" CAP	91.20
420453H	WAX MOTOR HIGH TEMP. MOD. 1-10	118.80
420453L	WAX MOTOR LOW TEMP. MOD. 1-10	118.80
420508BP	PACKING RING, QTY= 25	178.40
420508JP	PACKING RING QTY= 250	1,398.00
420518A	SEAT, COMB STD/HI CAP	19.40
420615C	UPGRADE KIT, UTC, HIGH CAP.	343.30
420615L	UPGRADE KIT, UTC, LOW TEMP.	343.30
420616H	UPGRADE KIT, HIGH TEMP.	343.30
420616L	UPGRADE KIT, LOW TEMP.	343.30
427 017	CARTRIDGE ASSY.	137.00
H427017	CARTRIDGE ASSY.	180.90
427 019	BONNET ASSY.	198.50
427 200	UPGRADE KIT 427	554.70
427 201	UPGRADE KIT - LOW TEMP, 427	620.20
427 202	UPGRADE KIT - HIGH TEMP, 427	620.20
427 250	MOTOR KIT - STANDARD TEMP	235.60
427 251	MOTOR KIT - LOW TEMP	235.60
427 252	MOTOR KIT - HI TEMP	235.60
H427200	e427 UPGRADE KIT MODEL 1-3	554.70
H427201	e427 UPGRADE KIT LOW TEMP.	621.50
H427202	e427 UPGRADE KIT HI TEMP.	621.50
430 016	TEMP ADJ LOCK SCREW KIT (10)	44.60
430 017	431 TEMP. ADJ. LOCKSCREW KIT	44.60
430 020	MAX. TEMP. ADJ. KIT	46.80
430 021	SPRING KIT	46.80
436 036	WASHER	9.30
436031G	RETAINING SCREW	40.50
440 017	ELBOW ASSEMBLY 1/2" X 1/2"	226.10
440 034	VOLUME KNOB	64.60
440 035	VOLUME KNOB	46.20

Part No.	Description	List Price
440 041	DIAL	93.40
440 059	DIAL INSERT FOR FOTOGUARD	130.20
440 103	CONNECTOR	108.40
440 121	VOLUME STEM EXTENSION	155.90
440 125	SHUT OFF VALVE STEM EXT	38.10
440 145	ON OFF VALVE REPAIR KIT MDL5	74.10
440 151	SHUT OFF DISC	14.70
440 152	SHUT OFF DISC SPRING	9.30
440 154	SHUT OFF MANIFOLD	82.10
440 157	ADAPTOR	19.70
440 158	SPRING GUIDE	9.40
440 159	SHUT OFF STEM ASSEMBLY	130.40
440 160	SHUT OFF STEM ASSEMBLY	309.20
440 167	HANDLE SCREW	16.40
440 168	HANDLE SCREW	20.20
440 169	SHUT OFF HANDLE	38.10
440 170	VOLUME STEM EXTENSION	60.80
440 171	VOLUME STEM EXTENSION	144.70
440 172	VOLUME HANDLE	52.25
440 173	KNOB INSERT	126.70
440 175	440 CABINET	1,353.00
440 176	CABINET FOR FOTOPANEL	1,212.00
440 177	CONNECTOR	233.40
440 178	THERMOMETER MANIFOLD MOLD	115.50
440 205	ON OFF VALVE REPLACEMENT UNIT	411.00
440 207	DIAL POL FOR 440 208	156.40
440 212	NAME PLATE	18.40
440 223	QUAD RING KIT 440 FOTO (7)	46.80
440 224	WASHER KIT (8 PC)	49.90
440 231	BRACKET MOUNTING	144.70
440 234	BRACKET ASSEMBLY	181.40
440 235	VALVE REPLCMT UNIT FOR 440 3000	575.00
440041A	DIAL WITHOUT LOGO	93.40
440174A	FRONT PANEL	284.70
440181A	PANEL, FRONT	339.80
444 104	AERATOR KIT	28.10
444 107	SPOUT HARDWARE KIT	97.60
444 109	GN SPOUT	159.30
444 110	GN BASE	281.90
444 118	PLUG-IN TRANSFORMER	225.50
444 122	FAUCET SENSOR	49.50
444 126	SCREWDRIVER ESP SHOWER	16.40
444128A	GN SPOUT INSTALLATION KIT	64.60
444 135	COVER KIT	18.40
444 137	HARDWARE	25.00
444 142	JUNCTION BOX ASSEM	66.10
444 161	CONTROL BOX	585.40
444 174	SOLENOID VALVE	573.90
444 182	SOLENOID REPAIR KIT	258.90

Part No.	Description	List Price
444 183	SOLENOID REPAIR KIT	345.60
444 199	CABLE EXTENSION MODIFIED	130.40
444 254	SOLENOID ADAPTER	58.50
444 260	SWITCH PIEZO	306.80
444 308	LOCK NUT, 1-3/8" 18	27.30
444 416	SWITCH PIEZO	314.30
444 424	ANCHOR PLATE	111.30
445 102	BODY, STEAM & WATER MIXER	930.10
445 105	BONNET PLAIN	351.50
445 125	CHECK STOP	299.80
445 126	CHECK STOP ASSY, 1/2" BRT CHRM.	396.80
445 130	DISC HOLDER	17.50
445 131	CARTRIDGE ASSEMBLY	1,308.00
445 134	STEM	33.60
445 135	STEM	55.20
445 136	BONNET	29.80
445 137	BONNET, STEAM WATER MIXER BR.	42.60
445 138	POPPET SPRING	9.30
445 141	REPAIR KIT STEAM WATER MIXER	189.00
450 135	MOUNTING BRACKET	89.60
450 136	PIPE STRAPS	10.20
450 149	MOUNTING NUT	24.80
450 268	SOAP DISH HYDRO II	152.40
450 270	DIAL INSERT	46.20
450 271	SCREW. 8-32 X 1/2" POLISHED	9.30
450 272	SCREW DIAL INSERT V/P	24.10
450 273	SCREW, ST STL 10-32 X 3/8"	9.50
450 274	SCREW	9.30
450 276	SCREW	11.50
450 277	GASKET, SHOWER HEAD BASE	9.30
450 295	BRACKET, MOUNTING	57.60
450 327	SHROUD EXTENSION 24" BRACKET	266.50
450 334	BRACKETS, MTG	93.30
450 352	HYDROGUARD ASSEMBLY,EXTENDED	1,398.00
450 353	COVER PLATE	163.10
450 356	COVER PLATE	244.40
450 447	MOUNTING BRACKET	48.30
450183B	BACK PLATE ASSEMBLY	312.00
450192RK	SLEEVE KIT	69.10
450267G	SHOWER HEAD BASE	297.60
450269G	CAP. END CHROME PLATE	85.90
450273A	SCREW	9.30
450273BP	SCREW BULK PACK KIT (QTY= 25)	67.00
460 040	KNOB ASSEMBLY, ADJUSTMENT	119.40
460 041	ADJ KNOB ASSEMBLY	467.40
460 172	RED INDICATOR LIGHT	115.10
460 173	MINIATURE LAMP	23.90
460 231	CABINET DOOR ASSY	840.80
460 248	SWITCH, SELECTOR	382.80

Part No.	Description	List Price
460 323	TIMER W/KNOB & POTENTIOMETER	1,026.00
460 378	REPAIR KIT 1-1/2" SOLENOID	511.60
460 454	FITTING 1/2" NPT X 1/4" TUBE	43.10
460051R	REPAIR KIT FOR 1" SOLONOID	369.90
460053R	REBUILD KIT 1-1/2"	727.60
460172A	GREEN INDICATOR LIGHT	126.70
460292R	SOLENOID REPAIR KIT	1,613.00
473 015	GROMMET RUBBER	9.30
473 010	LEVER HANDLE	148.90
473 016	GASKET	11.40
473 017	ROUGH IN GUIDE	44.00
473 021	CROSS	97.60
473 022	NUT COMP.	17.00
473 033	410 3 PORT, BOTTOM OUT W/CROSS	743.90
473 035	HANDLE KIT	171.20
473 037	KIT, STEM EXTENSION	130.40
473 038	KIT, FACE PLATE	367.70
473 039	KIT, TEMPERATURE DISPLAY	430.30
473 042	KIT, POWDER COATED SCREW	22.60
473 044	KIT, INSTALLATION	60.30
473 045	INSTALLATION KIT	29.30
480 270	MOTOR REPLACEMENT KIT	54.80
480016M	480 MOTOR ASSEMBLY	171.20
483 026	LCD TRIM KIT (DEGREE F)	958.30
483 035	HANDLE KIT	252.40
490 050	HANDLE KIT LM 490 SERIES	16.30
590 088	VLV PKG KIT 200 PCS 591 490	1,634.00
590 089	3/4" VALVE PKG RING KIT	1,830.00
590 131	BONNET	252.80
590 134	BONNET	237.80
590 140	BONNET	309.70
590 164	MOLYKOTE LUBRICANT	167.20
590 203	STEM EXTENSION	82.30
590 204	STEM EXT.	45.10
590 233	UNION TAIL PIECE	188.70
590 234	UNION NUT	86.80
590 328	STOP SLEEVE	54.80
590 329	STOP SLEEVE	255.40
590 402	BONNET	489.60
590 432	THROTTLING DISC	915.40
590 434	VLV FLANGE & SEAT ASSEMBLY	974.30
590 435	VLV FLANGE & SEAT ASSEMBLY	557.90
590 462	STEM EXT SPACER	10.00
590 464	STEM EXT SPACER	22.30
590 487	1/2" VALVE BODY	188.70
590 488	VALVE BODY	284.70
590 567	1/2" POPPET	404.90
590 568	POPPET	453.90
590 569	POPPET	553.40

Part No.	Description	List Price
590 575	POPPET	284.70
590 584	VALVE BODY	284.70
590 585	VALVE BODY	284.70
590 604	STEM RETAINER	28.10
590 605	STEM RETAINER	89.60
590 606	STEM RETAINER	60.20
590 607	RETAINING STOP NUT	330.90
590 608	VALVE SEAT	66.20
590 610	VALVE SEAT	82.30
590 612	VALVE SEAT	104.00
590 623	DISC GUIDE	57.30
590 624	DISC GUIDE	22.30
590 650	POPPET	108.40
590 651	POPPET	89.60
590 664	POPPET	78.60
590 665	POPPET	115.50
590 666	R.A.POPPET	115.50
590 667	R.A.POPPET	115.50
590 668	VALVE BODY	301.30
590 684	VALVE SEAT	185.10
590 690	HLDR & STEM EXT ASY	413.40
590 691	HOLDR & STEM EXT ASY	413.40
590 692	COMP DISC/HOLDER/STEM EXT ASSY	474.90
590 693	STEM EXTENSION	71.20
590 743	STEM EXT & HLDR ASY	318.20
590 746	VALVE SEAT	84.30
590 748	VALVE SEAT	163.10
590 749	DISC HOLDER	89.60
590 756	DISC HOLDER	71.20
590 757	THRUST COLLAR	54.80
590 758	DISC GUIDE	44.10
590 759	DISC GUIDE	38.60
590 760	DISC GUIDE	32.70
590 762	SPACER	38.60
590 763	PACKING GLAND ASSY	45.00
590 775	DISC SLEEVE	54.80
590 779	STEM EXT & HLDR ASY	418.40
590 807	SPRING ADJM SCREW	54.80
590 813	SPG POSITION INDTR	9.30
590 814	SPRING GUIDE WASHER	22.30
590 815	PISTON PLATE WASHER	9.30
590 816	PISTON PL RTNING SCR	9.30
590 820	ADJUSTING ROD	7.75
590 821	SPRING	54.80
590 829	SPRING ADJM NUT ASY	71.10
590 859	LOWER HOUSING ASSY	285.50
590165A	SEAL	217.90
590404E	STOP SLEEVE 1-7/8" X 1-15/16"	48.80
590418A	GUIDE ROD & CAP ASSEMBLY	115.50

Part No.	Description	List Price
590418D	GUIDE ROD ASSY	137.10
590421A	STOP SPACER	17.00
590607A	RETAINING NUT STOP	49.50
590607B	RETAINING STOP NUT	49.50
590808B	STEM EXTENSION	16.60
591 692	3" DISC HOLDER ASSY	1,231.00
591 732	VALVE ASSEMBLY	1,947.00
591 733	VALVE ASSEMBLY	2,014.00
591 750	BODY, 3/4" VALVE,DIRECT ACTING	453.90
591 760	3/4" BONNET	278.30
591 762	1-1/4" BONNET	309.70
591 765	3/4" THROTTLING PLUG	82.30
591 766	1" THROTTLING PLUG	147.90
591 767	1-1/4" THROTTLING PLUG	147.90
591 768	1-1/2" THROTTLING PLUG	82.30
591 769	2" THROTTLING PLUG	167.20
591 770	3/4" VALVE DISC HOLDER	45.10
591 771	1" VALVE DISC HOLDER	119.00
591 772	1-1/4" VALVE DISC HOLDER	28.10
591 773	1-1/2" VALVE DISC HOLDER	89.60
591 774	2" VALVE DISC HOLDER	188.70
591 775	3/4" VALVE DISC	22.30
591 776	1" VALVE DISC	17.70
591 777	VALVE DISC	16.60
591 778	1-1/2" VALVE DISC	16.60
591 779	2" VALVE DISC	113.90
591 781	1" VALVE CAP	185.10
591 783	PACKING GLAND ASSEMBLY	72.80
591 786	STEM ASSEM 3/4" & 1" VALVES	265.40
591 789	1-1/4" VALVE STEM ASSEMBLY	265.40
591 790	1- 1/2" VALVE STEM	265.40
591 791	VALVE STEM ASSEMBLY	265.40
591 792	1-1/4" VALVE STEM	167.20
591 793	1-1/2" VALVE STEM	119.00
591 795	COLLAR	66.20
591 796	BEARING	16.60
591 797	BEARING	9.30
591 798	PACKING SPACER	47.30
591 802	STOP SLEEVE	137.10
591 803	STOP SLEEVE	71.20
591 843	STEM	509.40
591 896	1/2" VALVE DISC HOLDER	284.60
591 898	VALVE DISC 1/2"	99.10
591 899	VALVE DISC 3/4"	251.80
591 900	VALVE DISC 1"	251.80
591 901	VALVE DISC	251.80
591 902	VALVE DISC 1-1/2"	251.80
591 903	VALVE DISC 2"	251.80
591 907	NUT DA	89.70

Part No.	Description	List Price
591 912	DA NUT	28.10
591 916	1-1/2" RA NUT	137.10
591 919	WASHER (1/2" TO 1")	9.30
591 920	PACKING SPRING (1/2" TO 1")	9.30
591 921	PACKING ASSEMBLY (1/2" TO 1")	66.20
591 922	SPACER (1/2" TO 1")	14.70
591 923	WASHER (1-1/4" TO 2")	9.30
591 924	PACKING SPRING (1-1/4" TO 2")	9.30
591 925	PACKING ASSEMBLY (1-1/4")	180.60
591 926	SPACER (1-1/4" TO 2")	9.30
591 927	STEAM SERVICE PKG KIT	161.20
591 928	STEAM SERVICE PACKING KIT	180.60
591 949	POPPET 1-1/4" S.S.	390.30
591 950	1-1/2" S S POPPET DIRECT & REV	498.30
591 951	2" S S POPPET DIRECT & REV	594.90
591 957	PACKING SET FOR FLOWRITES	37.40
591 958	CHEVRON PKG	54.80
591 964	REBUILDING KIT	701.90
591 974	VALVE REPAIR/REBUILD KIT	681.70
591 975	REBUILDING KIT	1,205.00
591 980	VLV REBUILD/REPAIR KIT WM	1,234.00
591 989	REBUILD KIT 4" FL II	7,797.00
591 998	REBUILDING KIT 4"	3,312.00
591768A	1-1/2" THROTTLING PLUG	284.70
591771A	1" VALVE DISC HOLDER	213.10
591772A	1-1/4" VALVE DISC HOLDER	366.30
591773A	1-1/2" VALVE DISC HOLDER	417.60
591774A	2" VALVE DISC HOLDER	483.90
591817E	STEM ASSEMBLY	358.30
591843C	STEM FOR FLOWRITE 9-1/4" LONG	366.30
591843D	STEM	284.70
591922A	SPACER	12.75
593002E	MTG.KIT I/P & POS., 46" ACT.	778.80
593003F	MTG.KIT I/P & POS., 46" ACT.	239.00
594 080	PACKING SET TFE 1/4" DIA. STEM	82.30
594 081	PACKING SET TFE 3/8" DIA. STEM	82.30
594 090	PACKING SET EP 1/4" DIA. STEM	33.20
594 091	PACKING SET EP 3/8" DIA. STEM	33.20
594 099	BRAIDED GRAPHITE/ZINC PACKING	200.20
594 104	BONNET 1/2"	225.80
594 106	CAP 1/2"	119.00
594 107	VALVE SEAT 1/2"	167.20
594 118	WASHER FOR 1/4" DIA. STEM	9.30
594 119	WASHER FOR 3/8" DIA. STEM	9.30
594 126	BONNET, MACHINED 3/4" & 1"	225.80
594 129	VALVE SEAT FOR REPAIR ONLY	200.00
594 137	BONNET	270.10
594 140	VALVE SEAT 1-1/4" N.C.	206.20
594 152	BONNET 2"	373.30

Part No.	Description	List Price
594 155	VALVE SEAT	229.50
594 157	PACKING NUT ASSEM. 1/4" STEM	45.00
594 158	PACKING NUT ASSEM. 3/8" STEM	53.60
594 170	PACKING RING	8.70
594 171	PACKING RING	9.30
594 194	CAP 3/4" & 1"	126.70
594 195	CAP 1-1/4" & 1-1/2"	167.20
594 196	CAP 2"	188.70
594 220	WATER SERVICE PACKING KIT 1/4"	89.70
594 221	WATER SERVICE PKG KIT 3/8"	130.10
594 251	LOCK NUT	84.80
594 289	WATER PACKING KIT FOR 1" VALVE	74.60
594 290	WATER PACKING KIT 3/8" 4 SETS	72.80
594 354	2" BRONZE POPPET ASSEMBLY	511.60
594 370	GASKET 5" KECKLEY VALVE	270.10
594 451	2" VALVE BODY RA	885.60
594 456	2" BONNET	285.50
594 457	BONNET	398.60
594 466	VALVE CAP 2"	185.10
594 467	1" BONNET	180.60
594 468	BONNET	350.00
594 470	VALVE CAP 1-1/2"	147.90
594 472	CAP 1-1/2"	89.70
594 475	VALVE SEAT 1-1/2"	163.10
594 477	1-1/2" VALVE BODY	594.90
594 478	VALVE BODY	591.80
594 479	1-1/2" BONNET	398.60
594 481	1-1/2" BONNET	243.80
594 488	1-1/4" RA 3 WAY VALVE	366.30
594 489	VALVE BODY	374.70
594 490	1-1/4" D.A. VALVE BODY	291.60
594 499	BONNET	174.70
594 500	1" VALVE BODY, R.A. 3 WAY	266.50
594 501	1" VALVE BODY	417.60
594 504	1" CD VALVE BODY	373.30
594 505	BODY	240.50
594 506	BODY	326.00
594 513	VALVE SEAT 1"	167.20
594 515	YOKE & BRIDGE ASSEMBLY BLUE	82.30
594 542	BODY & SEAT ASSEMBLY	823.40
594 549	1-1/4" N.O. STEM ASSEMBLY	417.60
594 550	STEM ASSY 1-1/2"	446.90
594 551	2" N.O. STEM ASSY	450.70
594 558	STEM 1-1/4" NORMALLY CLOSED	419.70
594 559	1-1/2", NORMALLY CLOSED	496.40
594 566	STEM, 2" NORMALLY CLOSED	642.40
594 568	BODY & SEAT ASSEMBLY	583.50
594 570	1/2" N.O VALVE STEM ASSEMBLY	314.30
594 571	VALVE STEM ASSEMBLY N.O.	417.60
594 572	N.O. VALVE STEM ASSEMBLY (1")	373.30

Part No.	Description	List Price
594 574	VALVE STEM ASSEMBLY, 3/4" N.C	339.80
594 575	N.C. VALVE STEM ASSY 1"	357.70
594 819	STEM ASSEMBLY	82.30
594813A	STEM ASSEMBLY	119.00
594814D	STEM ASSEMBLY	122.70
594814H	STEM ASSEMBLY	122.70
594815A	STEM ASSEMBLY	119.00
594816E	STEM ASSEMBLY	119.00
594816F	STEM	119.00
594817A	STEM ASSEMBLY	119.00
594817D	STEM ASSEMBLY	119.00
594818A	STEM ASSEMBLY	119.00
595 496	PARTS KIT #11 REG	36.80
595 499	NAME PLATE	9.30
595 501	INNER SPRING #11 LOWER HOUSING	22.30
595 502	OUTER SPRING #11 LOWER HOUSING	33.20
595 503	SPRING GUIDE WASHER #11 REG.	9.30
596 150	DIAPHRAGM	301.30
596 151	ROLLING DIAPHRAGM	686.70
597 030	NUT, SQ. 5/16 18 X 17/64 X 9/16	16.60
597015A	STEM EXTENSION FOR 597 REG.	147.90
601 004	UNION NUT 1/2"	49.80
601 005	UNION TAIL PIECE 1 5/16" DIA.	28.10
601 010	SPACER BUSHINGS	19.50
601 016	1/2" BODY ASSEM	399.40
601 019	STEM HEAD RETAINER 1/2" R.A.	108.40
601 090	VALVE STOP REVERSE ACTING	71.20
601 091	VALVE STOP REVERSE ACTING	49.80
601 092	VALVE STOP REVERSE ACTING	54.80
601 093	VALVE STOP REVERSE ACTING	115.50
601004A	1/2" CHROME PLATED UNION NUT	74.60
601004G	UNION NUT BRIGHT CHROME 1/2"	121.60
602 004	UNION NUT FOR 3/4" VALVE R.A	45.10
602 005	UNION TAIL PIECE 3/4" VALVE	38.60
603 003	1" POPPET	391.70
603 012	STEM HEAD RETAINER BALANCED VALVES	9.30
604 003	POPPET	417.60
605 003	POPPET	417.60
609 003	UNION TAIL PIECE 1" BALANCED VALVES	82.30
609 004	UNION NUT 1" BALANCED VALVES	66.20
609 009	SPACER BUSHING	22.30
609 019	SPACER BUSHING	22.30
609 021	SPACER BUSHING	71.20
609019A	SPACER BUSHING	14.70
609019B	SPACER BUSHING	31.40
609019C	STOP SLEEVE	9.30
610 003	UNION TAIL PIECE 1-1/4" VALVE	130.10
610 004	UNION NUT 1-1/4" BAL. VALVE	115.50
611 003	UNION TAIL PIECE 1-1/2" VALVE	147.90
611 004	UNION NUT	119.00

Part No.	Description	List Price
612 049	UPPER POPPET SEAT 2" BAL.VALVE	301.30
612 051	LOWER POPPET SEAT 2" BAL.VALVE	301.30
612 100	STEM HEAD RETAINER	54.80
628 008	LOCKNUT 1-3/8" HEX.VALVE BONNET	24.25
653 002	DISC HOLDER	82.30
653 003	DISC HOLDER	257.00
653 004	DISC HOLDER	257.00
653 005	DISC HOLDER	236.70
653 009	DISC 3 EPDM	406.60
653 062	DISK	119.00
653 063	VALVE DISC 3/4" TEFLON	299.20
653 064	DISC	252.90
653 070	DISC 4"	1,175.00
653 163	DISC	109.90
653 164	DISC	78.60
653 212	3/4" TEFLON DISC	176.20
653 213	TEFLON VALVE DISC	274.00
653 214	1-1/4" TEFLON DISC	163.80
653 215	TEFLON DISC	159.40
653 216	TEFLON DISC	176.20
653 220	3/4" TEFLON DISC	100.20
653 225	VALVE DISC, 3/4"	13.40
653 226	VALVE DISC, 1"	16.20
653 227	VALVE DISC, 1-1/4"	18.40
653 228	VALVE DISC, 1-1/2"	24.60
653 229	VALVE DISC, 2"	27.30
654 009	DISC RETAINER NUT	41.20
654 010	DISC RETAINER NUT	99.10
654 011	DISC RETAINER NUT	33.30
654 012	DISC RETAINER NUT	82.30
654 016	STEM RETAINER	17.40
654 017	STEM RETAINER	12.90
654 019	STEM RETAINER	15.30
656 311	STEM HOLDER & DISC ASSEMBLY	469.70
656 527	CAP	99.20
656 528	3/4" VALVE CAP	82.30
656 761	REBUILDING KIT	147.90
672 110	SPRING	115.50
672 111	SPRING	115.50
672 113	SPRING	115.50
672 114	SPRING	115.50
672 136	COPPER SLUG	9.30
672 520	DIAPHRAGM FOR 12" ACTUATOR	842.90
672 614	FR ACTUATOR STEM, DA, 3/8" TH'D	152.40
672 615	FLOWRITE ACTUATOR LARGE SPRING	33.20
672 626	DIAPHRAGM, ACTUATOR	181.80
672 627	ACTUATOR THRUST PLATE	82.30
672 634	FR ACTUATOR STEM, DA, 3/8" TH'D	152.40

Part No.	Description	List Price
672 636	FR ACTUATOR STEM, DA, 1/4" TH'D	152.40
672 641	BEARING, STEM	9.30
672 642	SPRING	22.30
672 645	SPRING	67.60
672 646	SPRING	67.60
672 720	SCALE	38.20
672 721	SCALE 3/4 STROKE	44.00
672 722	SCALE	44.00
672 724	YOKE (PAINTED & MACHINED)	197.80
672559A	FR II START POINT TAG N.O.	9.30
672560A	FR II START POINT TAG N.C.	9.30
672618E	STEM BUSHING	93.40
672632A	TOP HOUSING	137.10
672633A	BOTTOM HOUSING PAINTED	126.70
672634A	FR ACTUATOR STEM, RA, 318 TH'D	152.40
672636A	FR ACTUATOR STEM, RA, 1/4 TH'D	152.40
672636C	STEM RA	188.70
672638B	WASHER INDICATOR	9.30
672639C	POSITIONER MTG. BRACKET	130.20
672723A	SCALE	17.00
675 026	HANDLE KIT	60.80
675 028	DIAPHRAGM/FILTER KIT	52.50
675 031	RETROFIT CARTRIDGE	237.00
675 034	FLANGE, 8" WIDESPREAD	52.30
675 036	CARTRIDGE	159.00
700 424	GAUGE DIAL	16.60
700 713	HOUSING, #11 REG	89.70
700128A	STEM EXTENSION	119.00
701 491	TANK FITTING ASSEMBLY	917.70
705 005	1" TANK FTG	51.30
705 006	1-1/4" TANK FTG	213.60
708 036	STEM HEAD RETAINER	54.80
709 075	WELL ASSEMBLY	581.70
709 128	WELL ASSEMBLY	1,064.00
709 166	BELLOWS STOP	9.30
740 018	DRIP PLUG	170.00
744 061	STOP PIN	7.75
744 062	GUIDE BUSHING	9.30
744 072	RESTRICTION SCREW	9.30
744 075	VALVE SPRING	9.30
744 078	ADJUSTING KNOB	22.30
744 082	WELL ASSEMBLY	1,446.00
744 083	GASKET	9.30
744 102	ACC KIT FOR ACCRITEM	297.20
744 124	SPG RETAINING SCREW	9.30
744 131	VALVE SEAT	49.20
744 134	RESTRICTOR SCREW	93.40
744 151	LEVER	72.80

Part No.	Description	List Price
744 154	LEVER PIVOT	9.30
744 163	VALVE	48.10
744 168	KIT	179.40
744 172	SENSITIVE TUBE ASSEMBLY	293.20
744 175	ADJUSTMENT SCREW	22.30
744 185	PLATE COVER JORDAN	64.60
744 191	SENSITIVE TUBE FOR SS ACCRITEM	1,190.00
744 202	BODY	278.30
744 205	COVER MOLDING	54.80
744 212	FOLLOWERS, POWER ELEMENT	14.70
744 213	VALVE SEAT	52.20
744 214	VALVE	66.20
744 215	SCREW, SPRING RETAINING	54.80
744 216	STEM, ADJUSTING	28.10
744 218	RESTRICTION SCREW	13.40
744 223	NAME PLATE	89.60
744 234	ADJ KNOB W/SCREW	45.10
744 254	ST BULB & CAP 7441272	1,357.00
744 283	SENSING ELEMENT, COPPER	270.10
744170D	COVER PLATE ASSM F&C	49.40
744262A	PICK NAME PLATE	62.00
744263A	PICK NAME PLATE	56.70
744263B	NAME PLATE, CELSIUS	54.80
800 005	BONNET	17.40
800 012	STEM ASSEMBLY, THROTTLING	14.20
800 020	GASKET	9.30
800 024	LIMIT STOP ASSEMBLY	46.10
800 030	SOFT COMPONENTS KIT	51.80
800 036	LEVER HANDLE KIT (1 SET)	68.40
800 040	FACEPLATE KIT, ROUND	171.20
800 050	WASHER	9.30
800 056	TEFLON GASKET	9.30
800 060	PLUNGER	9.30
800 061	PLUNGER DISC	9.30
800 063	O-RING	9.30
800 064	O-RING	9.30
800 075	COLOR INSERT FOR 800 ENGLISH	36.90
800 080	SCREW 8-32 X 3"	9.30
800 098	BILTMORE MODEL 1 & 2 REPAIR KIT W/LEVER	310.30
800 099	BILTMORE MODEL 1 & 2 REPAIR KIT W/KNOB	312.60
800 109	STEM EXT KIT FOR 800	113.10
800 110	STEM EXT.	38.10
800 162	SCREW WITH PATCH	9.30
800 163	VALVE REPAIR KIT, SERIES 800	189.50
800 164	SCREW 8-32 X 5/8" LG	9.30
800 167	SCREW W/PATCH	9.30
800 168	SCREW 8-32 W/PATCH	9.30
800 183	ROUND DIAL FOR 800 BILTMORE	167.20

Part No.	Description	List Price
800 185	REPLACEMENT KIT (BILTMORE)	40.90
800 200	KIT, 800 ACRYLIC HANDLE	123.10
800005BP	BONNET, QTY= 25	356.10
800005JP	BONNET, QTY= 100	907.40
800015H	SLEEVE, POLISHED CHROME PLATE	53.10
800015BH	SLEEVE, POLISHED BRASS	123.10
800020BP	GASKET, QTY= 25	156.40
800032A	BILTMORE 800 STEM/BON REPL KIT	126.70
800050BP	WASHER, QTY= 25	60.00
800058BP	O-RING, QTY= 25	37.50
800060BP	PLUNGER, QTY= 25	157.50
800063BP	O-RING, QTY= 25	42.60
800064BP	O-RING, QTY= 25	42.60
800080BP	SCREWS 8-30 X 3", QTY= 25	157.50
800164BP	SCREW W/PATCH BULK PACKED, QTY= 25	70.80
800164JP	SCREW, QTY= 500	1,262.00
800310C	INTERNAL BALANCE CHAMBER KIT	152.80
900 012	THROTTLING STEM ASSEMBLY	22.60
900 014	WASHER, MIXING PLATE	9.30
900 015	BONNET	9.40
900 026	SPRING STOP CHECK	9.30
900 028	SOFT COMPONENTS KIT, 900 MDL 3	53.60
900 030	REPAIR KIT SOFT COMPONENTS	53.60
900 031	900 BAL CHAMBER KIT MODEL 2	156.80
900 032	INTERNALS KIT	152.80
900 033	SPRING, STEM	9.30
900 035	KNOB	69.10
900 036	LEVER HANDLE, BILTMORE	82.10
900 040	ROUND FACEPLATE KIT	144.90
900 047	NUT “U" TYPE	9.30
900 049	CHECK STOP REPAIR KIT 900	104.20
900 050	CHECKSTOP KIT, 900 MODEL 3	104.20
900 068	ACRYLIC KNOB KIT, 900 MODEL 3	61.90
900 069	LEVER HANDLE KIT, 900 MODEL 3	82.10
900 070	LEVER HANDLE	69.60
900 075	CARTRIDGE PULLER	9.30
900 085	SHUT OFF DISC	9.30
900 090	TRIM PLATE, BRIGHT CHROME	30.30
900 091	HANDLE, BRIGHT CHROME PLATE	36.00
900 092	INSERT HANDLE	9.30
900 093	GASKET FOR SLEEVE	9.30
900 094	GASKET, TRIM PLATE	9.30
900 095	NAME PLATES, TRIM ENG W/CSA LOG	20.20
900 096	HANDLE BUTTON	9.30
900 102	FACEPLATE KIT, CHROME FINISH	126.70
900 103	HANDLE KIT, CHROME FINISH	89.30
900 105	HANDLE KIT, CHROME W/O STOP	89.30
900 107	HANDLE KIT WITHOUT STOP	82.10
900 108	KNOB KIT, ACRYLIC W/O STOP	61.90

Part No.	Description	List Price
900 109	STEM EXTENSION KIT	92.40
900 118	FOR MILWAUKEE FAUCET	30.70
900 120	ROUGH IN GUIDE FOR 900	9.30
900 123	MOUNTING BRACKET	17.50
900 132	SLEEVE FOR 909/910 BILTMORE	28.80
900 140	PLUG BUTTON, SERIES 900	13.40
900 141	PLUG BUTTON, SERIES 410 & 420	9.30
900 149	STEM	9.30
900 152	DIVERTER ASSEMBLY, SWEAT	179.70
900 155	FACEPLATE KIT	67.20
900 156	NAME PLATE	27.70
900 174	CHAMBER REPAIR KIT CITADEL	214.00
900 190	DIVERTER HANDLE KIT	28.20
900 191	DIVERTER STEM KIT	18.60
900 197	OUTLET SEALS	9.30
900 216	SPRING, .300 O.D., .375 LG	9.30
900 219	BONNET	9.30
900 231	THROTTLING STEM ASSEMBLY	17.10
900 240	CHAMBER REPAIR KIT, BAL.MDL3	97.20
900 259	BALANCE CHAMBER ASSEMBLY KIT	97.20
900 268	SLEEVE KIT, LARGE	32.70
900 269	BILTMORE SLEEVE KIT FOR MODEL 3	64.20
900014BP	WASHER QTY= 25	70.80
900015A	BONNET ASSEMBLY	63.80

Part No.	Description	List Price
900015B	900 BONNET,MACHINED	25.80
900017A	BONNET NUT	36.00
900019BP	ACRYLIC KNOB, QTY= 15	871.90
900020A	DIAL ROUND W/CSA LOGO	119.00
900026JP	SPRING, QTY= 500	359.80
900029BP	LEVER HANDLE, QTY= 15	1,071.00
900031A	BAL CHAMBER REP KIT MODEL 1	193.60
900033BP	SPRING, QTY= 25	147.80
900059JP	STEM, QTY= 250	885.20
900085BP	SHUT OFF DISC QTY= 25	98.90
900085JP	SHUTOFF DISC, QTY= 500	1,626.00
900090K	TRIM KIT (900 W/DIV)	111.90
900092BP	HANDLE INSERT QTY= 25	160.30
900093BP	GASKET, QTY= 25	160.30
900094BP	GASKET, QTY= 25	160.30
900095BP	NAME PLATE, QTY= 25	415.30
900096BP	HANDLE BUTTON BP. QTY= 25	70.80
900140BP	PLUG BUTTON, SERIES 900 PKG, QTY= 25	189.20
900140JP	BUTTON & INSERT, QTY= 250	1,160.00
975 130	CARTRIDGE, REPLACEMENT	159.30
975 181	4" WRIST LEVER HANDLE	214.40
975170A	1/2" VOLUME VALVE CONCEALED	557.90
SA12135	BONNET ASSEMBLY 428 HYDRO	309.50

IntelliStation™ Replacement Parts

Part No.	Description	List Price
88006470	CONTROLLER	1,143.00
6551624	CONTROLLER, UPGRADE KIT IOT (IS JR)	1,656.00
81019061	TEMPERATURE SENSOR W/WIRE	42.00
6551690	3/4 INCH 3-WAY VALVE AND ACTUATOR KIT (IS JR)	4,174.00
6551691	1 INCH 3-WAY VALVE AND ACTUATOR KIT (IS JR)	4,784.00
6551692	1 1/2 INCH 3-WAY VALVE AND ACTUATOR KIT (IS JR)	6,002.00
6551693	2 INCH 3-WAY VALVE AND ACTUATOR KIT (IS JR)	7,395.00
81019287	ACTUATOR	1,883.00
81020529	ACTUATOR W/ EXTENDED CABLE	1,883.00
6551290	ACTUATOR (IS JR)	1,883.00
81019288*	150PSI PRESSURE SENSOR WITH WIRE (P)	407.00
88005572	200PSI PRESSURE SENSOR WITH WIRE (P)	406.80
81019289	HIGH-SPEED TEMPERATURE SENSOR W/WIRE	102.90
6551291	TEMPERATURE SENSOR W/WIRE (IS JR)	89.90

***Note: ONLY for models built prior to May 25, 2017**

Part No.	Description	List Price
008 802	ST STL TUBING MAX LENGTH 160FT	NLA
030 011	SCREW, FIL, HD, BR	NLA
030 063	SCREW, BRASS 8-32 X 3/4"	NLA
030 107	SCREW	R/B 080 058
030 190	SCREW 0-80 X 1/8" LENGTH	NLA
030104B	FIL HD BR SCREW	NLA*
032271K	SCREW	R/B 080 008
032281K	SCREW	NLA
034 042	SCREW	NLA
034 063	BINDER HD BR SCREW	NLA
034106KBP	SCREW, 4-40 X 1" LG	NLA
034218G	SCREW	R/B 450 271
034222G	SCREW	R/B 034223G
034224GJP	SCREW, QTY= 500	NLA
035120K	CAP SCREW	NLA
035208G	BOLT 3/8-16 X 2-1/2" W/OUT NUT	NLA
041 132	NUT	R/B 041132GBP
041235J	NUT, LOCK 5/8-18 STEEL	NLA
042 520	NIPPLE	R/B 410 437
043 212	BUSHING	R/B 410 437
043 340	PLUG	NLA
043 834	VACUUM BREAKER, 1/2" NPT BOTTOM INLET	NLA
046 168	WASHER	NLA
046 171	WASHER, 7/8 X 13/64 BRASS	NLA
046021K	WASHER, SHAKEPROOF	NLA
047 009	O-RING	R/B 047 020
047 030	O-RING (N45) 1 3/4 X 2 X 1/8	NLA
047 205	RING, RETAINING - BERYLLIUM CU	NLA
047 210	SPIRAL RETAINING RING	NLA
047009BP	O-RING KIT	R/B 410 366
047009JP	O-RING KIT	R/B 047020JP
047052J	RETAINING RING	NLA
047061J	RING, RETAINING	NLA
047131BP	O-RING	NLA
047131JP	O-RING	NLA
080 001	SCREW	R/B 450 271
080 002	SCREW	R/B 450 273
080 012	SCREW	R/B 420 267
080 069	SCREW KIT, VANDAL PROOF	NLA
081 011	NUT, 9" FLOWRITE	NLA
080012A	SCREW	R/B 080 041
084 028	O-RING	NLA
089 008	SPANNER DRIVER SIZE 8	NLA
100 016	FLAPPER, RIGHT HAND	NLA
100 431	PINION	NLA
115 069	BODY	R/B 594 477
115 071	VALVE BODY	R/B 591 719
115 073	BODY	R/B 594 500
131 274	AMER. LOCK W/KEYS FOR CABINETS	NLA
131 387	BALL VALVE	R/B 132 692

Part No.	Description	List Price
131387A	BALL VALVE	R/B 132692A
131387B	BALL VALVE	R/B 132692B
132 760	CABINET	NLA
141 327	PROF. VINLY HOSE, 40" GLIDE RAIL, PUSH BUTTON	NLA
141 387	COMPRESSION RING, HI/CARB STEEL	NLA
141 761	DELUXE 69" METAL HOSE, 24" GLIDE RAIL	NLA
141 805	DUBL BARB CONNECTOR	NLA
141 819	ELBOW W/FLANGE BRASS	R/B 141 320
141 840	DELUXE METAL HOSE, 40" GLIDE RAIL	NLA
141 845	CHECKSTOP PLUNGER KIT TEFLON	R/B 141 000
141 869	PROF. METAL HOSE, 40" GLIDE RAIL	NLA
141 880	DELUXE, METAL HOSE, 24" WALL BAR	R/B141 163
141381H	INSERT KIT	NLA
141741B	SPINDLE	R/B 141 741
1420426	GAUGE, PRESSURE	R/B 1420373
147 116	SPRING KIT (1" & ABOVE TRAVEL)	NLA
147 118	POSITIONER DIAPHRAGM	NLA
147 119	POSITIONER HARDWARE KIT	NLA
147 123	VALVE PLUG	NLA
147116A	SPRING BAUMANN 71486 44 SPLIT	R/B 147 116
147301F	MOUNTING KIT	NLA
160 039	LOCK SCREW	NLA
181 338	COIL	NLA
225 045	BAFFLE CYLINDER	NLA
225 137	RING	NLA
225 258	BONNET	R/B 225 419
225 286	BODY CASTING RH	R/B 225 444
225 372	MOTOR ASSEMBLY	R/B 225 395
225 382	DISC HOLDER	R/B 225 433
225 383	SCREW	R/B 225 432/443
225 390	H MIXER KIT 10 GAL. 65/115F.	R/B 427 200/201/202
225 391	H MIXER KIT 5 GAL. 65/115F.	R/B 427 200/201/202
225 394	H CYLINDER & VALVE RPLCMT KIT	R/B 427 200/201/202
225 395	H MOTOR REPLACEMENT KIT M3	R/B 427 200
225 396	H MOTOR REPLACEMENT KIT M3	R/B 427 202
225 397	H MOTOR REPLACEMENT KIT M3	R/B 427 201
225 403	PACKING GLAND	R/B 225 450
225 419	BONNET	R/B 225419N
225051G	PACKING GLAND	R/B 225 450
225286G	BODY	R/B 225 445
227 038	COMBINATION SEAT	R/B 227038A
227 039	COMBINATION SEAT	R/B 227039A
227 049	MOTOR STEM	NLA
227 050	SHUT OFF DISC RTNR	R/B 420 220
227 157	DIAL INSERT	R/B 420 237
227 173	STEM SLEEVE	R/B 420 256
227 187	STOP RING	R/B 420 221
227 190	SPACER, SLEEVE	R/B 420 223
227 192	PACKING RING	NLA
227 195	KNOB KIT	R/B 420 481

NLA - No Longer Available

R/B - Replaced By

Part No.	Description	List Price
227 161	KNOB INSERT	NLA
227 290	VALVE & HOT WATER SEAT KIT	R/B 420 451/616
227 338	HYDRO DISC REPL KIT	NLA
227 339	MOTOR REPLACEMENT KIT 65-115°F	R/B 420 451/616
227 340	VALVE & H WATER SEAT	R/B 420 451/616
227 341	COMB SEAT REPL KIT	R/B 420 451/616
227 342	MOTOR REPL KIT 120-175°F	R/B 420451H/616H
227 343	MOTOR REPL KIT 40-90°F	R/B 420451L/451L
227 344	TAMPER PROOF CAP ASY	NLA
227 346	END PLATE	NLA
227 377	BONNET REPAIR KIT	R/B 420 451/616
227 351	SEAT	R/B 420 452/616
227063BP	HOT WTR DISC, QTY= 25	NLA
227192BP	PKG RING 25 PCS TO KIT	NLA
227 430	PLG.BUTN.	R/B 420 225
227 431	VALVE KIT	R/B 420 556
227 445	VALVE KIT	R/B 420 555
227 561	SHUTTLE & HW SEAT	R/B 420 451/616
227038A	COMBINATION SEAT	NLA
227039A	COMBINATION SEAT	NLA
227206BP	SHUTOFF DISC, QTY= 25	NLA
227233BP	SPACER RING BULK 25/KIT	NLA
227339JJP	VALVE ASSEMBLY, QTY= 200	R/B 420 451JJP
227340JJP	VALVE HOT WATER SEATS, QTY= 200	R/B 420 451JJP
227341JJP	COMBINATION SEAT, QTY= 200	R/B 420 451JJP
227430BP	PLUG BUTTON	R/B 227 164
230 041	CHECKSTOP LH 1/2" BRT CHROME	R/B 230 042
230 047	CHECKSTOP ANGLED 1/2" IPS BRT CHROME	R/B 230 048
230 060	GASKET	R/B 230 065
230 076	BONNET	R/B 230076A
230 077	BONNET	R/B 230077A
230 078	BONNET	R/B 230078A
230 080	STEM	NLA
230 096	UNION NUT	NLA
230 120	TAIL PIECE	NLA
230 128	1/2" TRIPLE DUTY C	NLA
230 154	CHECK STOP LEFT HAND PC	NLA
230 190	LT. HAND CHECK STOP BODY	NLA
230 196	BODY CASTING RH	R/B 230 146
230 199	BODY, LEFT HAND (PLAIN)	NLA
230 217	BODY 3/4" CHECK STOP	NLA
230 290	STEM ASSEMBLY POLISH CHROME	NLA
230 329	BONNET KIT 1/2" TD POL CHR	NLA
230 330	BONNET KIT 1/2" TD RGH BRZ	NLA
230 335	CHECKSTOP REPAIR KIT SPECIAL	R/B 141 000
230 305	PLUNGER DISC	NLA
230336BP	SPRING KIT, QTY= 25	NLA
230077A	BONNET	NLA
230 262M	3/4" POLYCHROME CHECK STOP	NLA
331 077	DIAPHRAGM	R/B 331077A
390 052	GASKET, FLANGE	NLA

Part No.	Description	List Price
390 193	SPRING ASSEM OVER TRAVEL	R/B 390 512
390 288	SCREEN REPLACEMENT KIT	NLA
390 290	N 125 HYDRO GASKET K	NLA
390 292	DISC	NLA
390 295	431 MOTOR KIT	R/B 390 016
390 296	431 MOTOR KIT	R/B 390 016
390 297	431 POPPET KIT	R/B 390 067
390 299	432 MOTOR KIT	R/B 390 017
390 300	432 MOTOR KIT	R/B 390 017
390 301	POPPET KIT	R/B 390 466
390 303	433 MOTOR KIT	R/B 390 511
390 304	433 MOTOR KIT	R/B 390 511
390 307	434 MOTOR KIT	R/B 390 512
390 308	434 MOTOR KIT	R/B 390 512
390 310	CROSS HANDLE AND ADJ. KIT	NLA
390 329	431 MOTOR KIT	R/B 390 016
390 330	432 MOTOR KIT	R/B 390 017
390 331	433 MOTOR KIT	R/B 390 511
390 332	434 MOTOR KIT	R/B 390 512
390 338	ADJUSTMENT KNOB	NLA
390 339	ADJUSTMENT KNOB	NLA
390 461	POPPET	R/B 390 491
390 472	SOLDER RING	NLA
390075BP	POPPET, KIT	R/B 390483BP
390151BP	SPRING ASSEMBLY KIT	NLA
390151JP	SPRING ASSEMBLY KIT	NLA
390193JP	SPRING ASSEMBLY KIT	NLA
390239JP	SPRING ASSEMBLY KIT	NLA
390305N	POPPET KIT	NLA
390466N	432 POPPET KIT, AFTER FEB '91	NLA
390468N	434 POPPET KIT, AFTER FEB '91	NLA
390491BP	POPPET, QTY= 5	NLA
400022BP	SPRING KIT	R/B 410427BP
401 120	DIVERTER KNOB	NLA
401 173	DIAL ASSEMBLY	R/B 401173A
401 205	STEM	NLA
401 206	STEM EXT.	NLA
401 228	ADJ. STOP	R/B 401 278
401 232	CHAMBER	R/B 410 330
401 272	DIAL KIT	NLA
401165BP	MAX. TEMP. STOP BULK 25/KIT	NLA
401173A	DIAL ASSY.	NLA
401228BP	STOP KIT	R/B 401278BP
403 004	PACKING GLAND	NLA
410 144	WASHER	R/B 410 368
410 161	DIAL	R/B 410 414
410 163	LEVER ASSEMBLY	R/B 410 415
410 168	GASKET	R/B 410 284
410 360	HANDLE	NLA
410 373	GASKET KIT	R/B 410284BP
410 387	KNOB	R/B 410 383

NLA - No Longer Available

R/B - Replaced By

Part No.	Description	List Price
410 388	CONVERSION KIT	R/B 410 384
410168BP	GASKET KIT	R/B 410284BP
420 106	KNEE PLATE ASY	NLA
420 140	ASSEMBLY,CARTRIDGE	R/B 420 452
420 153	VALVE ASSEMBLY	R/B 420 034
420 155	SEAT, HOT WATER (HI CAPACITY)	NLA
420 156	SEAT, STANDARD CAP. HOT WATER	NLA
420 161	BONNET REPAIR KIT	R/B 420 451/616
420 184	STEM	R/B 420184A
420 193	VALVE ASSEMBLY	NLA
420 195	OVER RIDE STEM	NLA
420 200	BONNET	R/B 420 209
420 201	BONNET	R/B 420 208
420 203	420 CONV KIT FOR 110F SUPPLY	R/B 420 451/616
420 209	BONNET, MACHINED	NLA
420 219	SCREW KIT, LUCITE SCREW (20)	NLA
420 220	SHUT OFF DISC RET. KIT (6)	NLA
420 221	PACKING STOP RING KIT (5)	NLA
420 223	TEMP STOP SPACER KIT (12)	NLA
420 224	NAME PLATE	NLA
420 227	420 CONV. KIT	RB 420 451/616
420 250	HOT WATER SEAT	R/B 420250A
420 256	STEM SLEEVE	NLA
420 265	STOP RING, PACKING	NLA
420 304	420 BDY ASSY	R/B 420 143
420 305	PACKING GLAND	R/B 420 578
420 321	420 VALVE ASSY 4 PORT	R/B 420 128
420 343	STEM, UTC ROUGH CHROME	NLA
420 441	440 BODY ASSEMBLY	R/B 420 143
420 444	KIT, CARTRIDGE, W/RUBBER SEAT	RB 420 034
420 449	440 FOTOGUARD BODY ASSY	R/B e420 449
420 450	440 BODY ASY BR CHR MD7	R/B e420 450
420 461	420 BODY ASSEMBLY MD 7	R/B 420 143
420 464	HYDROGUARD ASSEMBLY MODEL 8	R/B 420 153
420 470	SEAT ASSEMBLY. H.W COMB 110°F.	NLA
420 498	MOTOR, THERMOSTATIC 65/115°F	NLA
420 499	MOTOR THERMOSTATIC 120 175	NLA
420 519	MOTOR KIT UNDER COUNTER MIXER	R/B 420 611/615
420 520	COMBINATION SEAT KIT	R/B 420 559
420 522	COMBINATION SEAT KIT 1 GALLON	NLA
420 525	VALVE ASSEMBLY KIT STD CAPACITY	NLA
420 531	HYDROGUARD BODY ASSEM	R/B 420 534
420 555	VALVE KIT & H/W SEAT 3 GPM	R/B 420 451/616
420 556	VALVE KIT & HW/COMB H CAP	R/B 420451C/616C
420 557	VALVE KIT HW/COMB SEAT H CAP	R/B 420 451/611
420 558	KIT, COMB STD/HI CAP	R/B 420 451/616
420 559	KIT COMBO SEAT HI TECH	R/B 420611C/615C
420 560	KIT, VALVE ASSY STD/LO CAP UTC	NLA
420 561	KIT, VALVE & HW SEAT STD CAP	NLA
420 562	KIT, INTERNAL REBUILD 5 9	R/B 420 451/616

Part No.	Description	List Price
420 563	VALVE ASSY, KIT	NLA
420 580	VALVE & HOT WATER SEAT	NLA
420 615	UPGRADE KIT, UTC, STD. TEMP	NLA
420122BP	ADJUSTMENT STEM QTY= 15	NLA
20122JP	ADJUSTMENT STEM QTY= 50	NLA
420155BP	HOT WATER SEAT, QTY= 15	NLA
420155JP	HOT WATER SEAT QTY= 25	NLA
420184H	ADJUSTMENT STEM	NLA
420200A	BONNET	R/B 420 209
420200ABP	BONNET	R/B 420209BP
420200JP	BONNET	NLA
420201A	BONNET	R/B 420 208
420209BP	BONNET, QTY= 15	NLA
420250A	HOT WATER SEAT	NLA
420305BP	GLAND KIT	NLA
420305JP	420 GLAND KIT	NLA
420470BP	COMBINATION SEAT QTY= 5	NLA
420470JP	COMBINATION SEAT (10)	NLA
420519V	MOTOR KIT HIGH TEMP	NLA
420519W	MOTOR KIT LOW TEMP	R/B 420 615L
420611C	420 UTC UPGRADE KIT	NLA
420611H	420 UTC, UPGRADE KIT, HIGH TEMP.	NLA
420615H	UPGRADE KIT, UTC, HIGH TEMP.	NLA
420616C	UPGRADE KIT, HIGH CAP.	NLA
430 018	ADJ LOCK SCREW KIT 430 (8)	NLA
430 019	SCREW TRI HANDLE (2)	NLA
433004G	PACKING GLAND NUT	NLA
435 038	VALVE KIT	NLA
436 088	HANDLE	NLA
440 182	CABINET	NLA
440 186	BRACKET	R/B 440 234
440 208	DIAL ASSY	NLA
440 236	BRAIDED CONNECTOR	NLA
4402000	FOTOPANEL	R/B 4401000
4402019	FOTOPANEL	R/B 4401020
4420184A	ADJ STEM FOR 420 HYDRO	NLA
444 115	MICROPHONE & ENC.	DISC.
444 143	SHOWER INST. KIT	NLA
444 153	“H” PANEL INFRARED SENSOR	NLA
445 107	OUTLET SHUT OFF DISC ASSEMBLY	NLA
445 113	STEM	NLA
445 114	STEAM SEAT	NLA
445 116	DISC HOLDER	NLA
445 117	ADAPTER	NLA
445 118	CARTRIDGE SPRING	NLA
445 119	RETAINING WASHER	NLA
445 121	STEAM DIFFUSER	NLA
445 124	LIMIT STOP	NLA
4451000	STEAM AND WATER MIXER RGM BRZ	NLA
4451001	STEAM AND WATER MIXER BRT CHR	NLA

NLA - No Longer Available

R/B - Replaced By

(Prices Effective 01/08/24)

Part No.	Description	List Price
450 154	COUPLING	NLA
450 169	COVER PLATE	NLA
450 192	SLEEVE	R/B 450192RK
450 451	TUBE	NLA
4504014	CORNER MOUNTING BRACKETS	R/B 4500430
460 011	IND CIR BD ASSEMBLY W/TERM	NLA
460 014	SWITCH, 3 POSITION TOGGLE	NLA
460 015	SWITCH ASSEMBLY TOGGLE	NLA
460 029	MOTOR FOR SHOWERTROL	NLA
460 031	CLUTCH SPRING SHOWERTROL	NLA
460 038	CAPACITOR	NLA
460 045	ADJ. STOP	NLA
460 067	TOGGLE SWITCH ASSEMBLY	NLA
460 136	PLATE, FRONT FOR SHOWERTROL	NLA
460 145	BLANK SWITCH PLATE	NLA
490 020	LOWERS ASSY STD RANGE 90° - 120°F	NLA
490 027	LOWER ASSY WIDE RANGE 110° - 145°F	NLA
490 028	LOWER ASSY HIGH RANGE 80° - 160°F	NLA
590 137	BONNET ASSEMBLY	R/B 594 499
590 143	BONNET	R/B 594 481
590 146	BONNET	R/B 594 456
590 166	CUP, GREASE	NLA
590 405	LOCKNUT	NLA
590 431	THROTTLING DISC	NLA
590 440	VALVE CAP	NLA
590 576	POPPET	NLA
590 577	POPPET	NLA
590 578	POPPET	NLA
590 579	POPPET	NLA
590 582	POPPET	NLA
590 586	BODY	R/B 594 506
590 603	LOCK PIN	NLA
590 670	BODY	R/B 594 504
590 672	BODY	R/B 594 505
590 679	CAP	R/B 594 458
590 681	SEAT	R/B 594 459
590 686	VALVE CAP	R/B 594 470
590 750	VALVE CAP	R/B 594 513
590 766	PACKING SPACER	NLA
590 773	RING	R/B 594 081
590 817	YOKE/BRIDGE	R/B 594 515
590 916	SEAT	R/B 594 474
590808A	STEM EXTENSION	R/B 590808B
591 502	V RING PKG. KIT (1 SET)	NLA
591 693	DISC ASSEMBLY 4"	NLA
591 719	VALVE BODY	NLA
591 701	BODY ASSY	R/B 594 489
591 729	RETAINER, STEM HEAD	R/B 591729A
591 751	BODY	R/B 591 732
591 752	BODY	R/B 591 733

Part No.	Description	List Price
591 758	BODY	R/B 594 478
591 761	BONNET	R/B 594 467
591 763	BONNET	R/B 594 479
591 764	BONNET	R/B 594 459
591729A	STEM HEAD RETAINER KIT	NLA
591814F	STEM EXTENSION	NLA
591814H	STEM EXTENSION	NLA
591814J	STEM EXTENSION	NLA
591814K	STEM EXTENSION	NLA
591815A	STEM EXTENSION	NLA
591 818	STEM EXTENSION	R/B 594818A
591 819	STEM EXTENSION	R/B 594 819
591 906	WASHER WAVY	NLA
591 908	NUT RA	NLA
591 917	2" RA NUT	NLA
591 967	VALVE REBUILD/REPACK KIT	NLA
591813A	STEM EXTENSION	R/B 594813A
591817A	STEM EXTENSION	R/B 594817A
591817B	STEM EXTENSION	R/B 594817D
591817C	STEM EXTENSION	R/B 594817D
591817D	STEM EXTENSION	R/B 594817D
591818A	STEM EXTENSION	R/B 594818A
591843B	STEM	NLA
593002F	MTG.KIT I/P & POS., 46" ACT.	NLA
593003E	MTG.KIT I/P & POS., 46" ACT.	NLA
594 011	VALVE ASSEMBLY	NLA
594 082	STEM EXTENSION	R/B 594 570
594 083	STEM EXTENSION	R/B 594 571
594 084	STEM EXTENSION	R/B 594 572
594 086	STEM EXTENSION	R/B 594 550
594 087	STEM EXTENSION	R/B 594 551
594 093	STEM EXTENSION	R/B 594 574
594 094	STEM EXTENSION	R/B 594 575
594 095	VALVE STEM	R/B 594 558
594 096	STEM EXTENSION	R/B 594 559
594 097	STEM EXTENSION	R/B 594 560
594 130	VALVE SEAT	R/B 594 568
594 141	1-1/2" VALVE SEAT	NLA
594 207	VALVE STEM	R/B 594 566
594 210	SPRING	NLA
594 295	VALVE SEAT	NLA
594 369	DISC	NLA
594 458	VALVE CAP	NLA
594 459	VALVE SEAT 2"	NLA
594 517	YOKE #11 3 WAY REGULATOR	NLA
594517A	YOKE	R/B 594 517
594 560	2" STEM NORMALLY OPEN	NLA
594 573	N.O. VALVE STEM ASSEMBLY	NLA
595 517	PART KIT	NLA
601005G	UNION TAIL PC	NLA

NLA - No Longer Available

R/B - Replaced By

Part No.	Description	List Price
604 002	CAP	R/B 591 781
612 055	GASKET	NLA
612 060	POPPET	R/B 594 354/817A
632 004	GASKET	NLA
632 005	GASKET	NLA
633 005	GASKET	NLA
653 068	DISC	NLA
653 069	DISC	NLA
653 160	DISC	R/B 653 062
653 160	DISC	R/B 653 062
653 162	DISC	R/B 653 064
653 166	DISC	R/B 653 068
653 167	DISC	R/B 653 069
653 169	DISC	R/B 591 693
653 172	DISC	NLA
653 198	DISC	R/B 653 226
653 199	DISC	R/B 653 227
653 203	DISC	R/B 653 009
656 511	DISC	NLA
656 740	DISC KIT (10)	NLA
657 220	PLUG	NLA
657 552	DISC	R/B 656 740
657 796	DIAPHRAGM	NLA
672 102	RUBBER DIAPHRAGM	NLA
672 141	HOUSING	NLA
672 145	SCREW	NLA
672 294	SPRING	NLA
672 295	SPRING	NLA
672 365	8" HVY DUTY VALVE DIAPHRAGM	NLA
672 419	STEM	R/B 672 557
672 420	STEM	NLA
672 430	SPRING	NLA
672 436	THRUST WASHER	NLA
672 437	THRUST BEARING RETAINER	NLA
672 557	PLATE & STEM	NLA
672 558	PLATE & STEM	NLA
672 610	YOKE	R/B 672 724
672 625	FLOWRITE II ACTUATOR H/W KIT	NLA
672 632	TOP HOUSING	NLA
672 633	HOUSING	R/B 672633A
672 635	SPRING	R/B 672 642
672 637	POSITION INDICATOR	R/B 672723A
672 640	I/P MTG BRACKET	NLA
672 725	YOKE	NLA
672 614B	STEM	NLA
672 634A	STEM	NLA
672636B	STEM D.A.	NLA
700 125	BRIDGE ASSEMBLY	NLA
700 317	SLEEVE	NLA
700 804	SPRING SEAT	NLA

Part No.	Description	List Price
700 920	SAFETY TYPE PISTON PLATE ASSEMBLY	NLA
703023A	YOKE	R/B 594 517
703 040	ADJ NUT ASSEMBLY	NLA
709 167	HOUSING	R/B 700 713
744 063	SEAT	R/B 744 131
744 155	VALVE	R/B 744 163
744 170	COVER PLATE	R/B 744170D
744 184	ACCRITEM COVER PLATE JORDAN	NLA
744 204	LEVER	R/B 744 151
744 235	SENSING ELEMENT	R/B 744 283
800 015	SLEEVE	R/B 800015H
800 034	SCREW KIT	NLA
800 035	CRYSTAL KNOB KIT	R/B 800 200
800 041	OCTAGONAL ESCUTCHEON	NLA
800 044	BONNET KIT	R/B 800032A
800 049	CHECK STOP	R/B 900 049
800 067	SCREW	NLA
800 078	DIAL	NLA
800 144	INSERT FOR LUCITE HANDLE	NLA
808 517	DUCT FLANGE	NLA
800015B	SLEEVE	NLA
800036B	HANDLE	NLA
800080B	P.B. SCREW	NLA
800098A	REPAIR KIT	R/B 800 098
800099A	KIT	R/B 800 099
8943924	BLACK DIAL, 1-7/8" BULB	NLA
900 010	OCTAGON FACE PLATE	NLA
900 017	BONNET NUT	R/B 900017A
900 019	KNOB	R/B 900 035
900 020	DIAL	R/B 900020A
900 027	O-RING	R/B 800 056
900 029	HANDLE	R/B 900 107
900 039	SCREW	R/B 080 026
900 041	FACEPLATE KIT, OCT.	NLA
900 042	FACEPLATE	NLA
900 044	FACEPLATE	NLA
900 078	DIAL	NLA
900 101	HARDWARE KIT	R/B 900 102/103
900 137	NAME PLATE	NLA
900 165	FACEPLATE, KIT	NLA
900 192	DIVERTER O-RING KIT	NLA
900020K	FACEPLATE W/DIVERTER FOR 929H	NLA
900024A	BUTTON INSERT	R/B 900 140
900024CBP	PLUG BUTTON KIT	R/B 900140BP
900121A	REMODELING PLATE, CHROME-PLATED	R/B 900 121
981 496	SENSITIVITY TUBE	NLA

NLA - No Longer Available R/B - Replaced By

Notes

Notes

Notes

Notes

Notes

To locate your nearest Powers representative, please click on our *FIND A REP* locator on PowersControls.com

Represented by:

POWERS™

A **WATTS** *Brand*

USA: T: (888) 432-8932 • PowersControls.com
Canada: T: (888) 208-8927 • PowersControls.ca
Latin America: T: (52) 55-4122-0138 • PowersControls.com

© 2024 Powers